General Information

Section Page

1.1 Contents of the Manual ---------- 1
1.2 Machine Data Plate ---------- 2
1.2 Technical Support ---------- 2

2. Technical Information

2.1 Description of the Machine ---------- 3
2.2 Machine Footprint ---------- 3
2.3 Specifications and Capacities ---------- 4
2.4 Bar stock requirements ---------- 4
2.5 Safety ---------- 5
2.5.1 Covers ---------- 5
2.5.2 Axial Shifting Switch ---------- 5
2.5.3 Lathe Door Safety ---------- 6
2.5.4 Emergency Stop Buttons ---------- 6

3. Transportation and Handling

3.1 Lifting and Moving by Forklift ---------- 7
3.2 Lifting by Crane ---------- 8

4. Installation of the Bar Feeder

4.1 Lathe Preparation ---------- 9
4.2 Distance from the Lathe ---------- 9
4.3 Axial Shifting Device ---------- 10
4.4 Magazine Attachment ---------- 12
4.5 Alignment ---------- 14
4.6 Anchoring the Bar Feeder ---------- 15

4.7 Electrical Connection --- 15
4.8 Initial Magazine Finger Adjustment --- 15
4.9 Resetting the Home Position -- 18

5. Adjustments and Settings

5.1 Adjustment of Magazine Angle --- 20
5.2 Changing Bar Pushers -- 21
5.3 Axial Shifting -- 22

6. Control Operation and Description

6. Rebel 102 SE Remote Pendant --- 23
6.1 Control Pendant Functions --- 23
6.1.1 Status LEDs -- 23
6.1.2 Pusher Jog Buttons -- 23
6.1.3 V-Tray Up and Down Buttons --- 24
6.1.4 Pre Auto and Automatic/Manual Buttons -- 24
6.2 Sequence for Manually Changing Bars -- 24
6.2.1 Unload Bar from Lathe -- 24
6.2.2 To Load a New Bar --- 25
6.3 HMI (Control Panel) -- 25
6.3.1 Starting the Bar Feeder -- 25
6.3.2 Setting the Measurement Standard to Inches or Millimeters ------------------------------ 26
6.3.3 Manual Screen Functions -- 26
6.3.4 Passwords --- 26
6.3.5 Program Storage --- 27
6.3.6 Forward and Reverse Jog Buttons -- 28
6.3.7 Bar Off Button -- 28
6.3.8 Bar On Button --- 28
6.3.9 Automatic Button -- 28

6.3.10 Automatic Screen Functions ---------- 29

7. Setup Wizard

7. Setup Wizard Screens ---------- 30

8. Maintenance

8.1 Periodic Maintenance ---------- 37
8.2 Drive Belt Tension Adjustment ---------- 38
8.3 Lubrication ---------- 39
8.4 Maintenance Screens ---------- 40

9. User Parameters

9. User Parameters 1 through 8

10. Factory Parameters

10. Factory Parameters 11 through 21 ---------- 44

11. Service Technician Parameters

10. Service Technician Parameters 22 through 42 ---------- 53

12. Alarms

Alarms 1 – 4 ---------- 73
Alarms 5 – 13 ---------- 74
Alarms 14 – 19 ---------- 75
Alarms 20 – 23 ---------- 76
Alarms 24 – 26 ---------- 77

Alarms 27 – 29 ---------- 78
Alarms 30 – 32 ---------- 79
Alarms 33 – 35 ---------- 80
Alarms 36 – 38 ---------- 81
Alarms 39 – 41 ---------- 82
Alarms 42 – 44 ---------- 83
Alarms 45 – 47 ---------- 84
Alarms 48 – 51 ---------- 85
Alarms 52 – 70 ---------- 86
Alarms 93 – 96 ---------- 87

13. Electrical System

Electrical schematic table of contents ---------- 88
Schematic ---------- 89

14. Parts

Parts ordering information ---------- 106
Electrical components ---------- 106
Exploded views ---------- 107

1. General Information

Please read and understand the Manual before operating the bar feeder

1.1 Contents of this Manual

The bar feeder manufacturer has provided this manual as an integral part of the machine. Adherence to the instructions of the manual will help prevent injury to the operator and damage to the machine as well as helping to realize the maximum potential of the bar feeder and machine tool. Particularly important points of information are preceded by the following symbols and text:

Warning Indicates a potential danger to life or risk of personal injury. Exercise extreme caution.

Caution Indicates a possible hazardous condition. Take precautions according to the instructions following these warnings to help prevent injury to personnel or damage to the equipment.

Important Information precedes special or technical information. Additional information can be located by using the table of contents of this manual.

Skilled Denotes operations that must be carried out by qualified and skilled personnel. Other operations may be performed by qualified personnel or trained operators.

1.2 Machine Data Plate

- **A.** Name of manufacturer
- **B.** Date of manufacture
- **C.** Type(Model)
- **D.** Serial number
- **E.** Feeding voltage
- **F.** Frequency
- **G.** Driving voltage
- **H.** Control voltage
- **I.** Machine weight
- **J.** Amperage

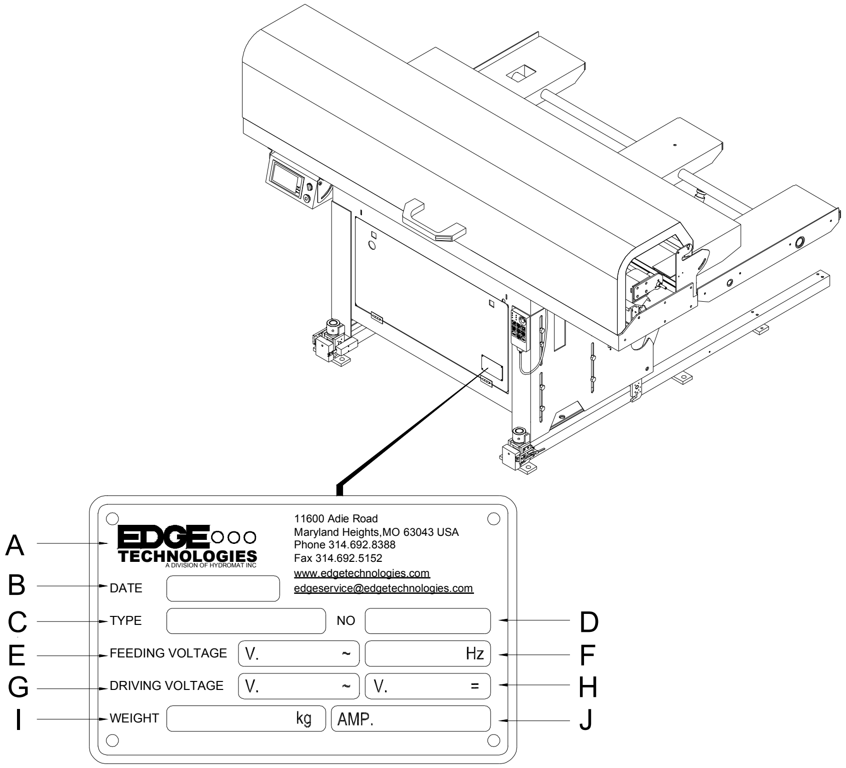
A
B
C
E
G
I
D
F
H
J
EDGE TECHNOLOGIES
A DIVISION OF HYDROMAT INC
11600 Adie Road
Maryland Heights,MO 63043 USA
Phone 314.692.8388
Fax 314.692.5152
www.edgetechnologies.com
edgeservice@edgetechnologies.com
DATE
TYPE
NO
FEEDING VOLTAGE
V. ~
Hz
DRIVING VOLTAGE
V. ~
V. =
WEIGHT
kg
AMP.

Important information When inquiring about or ordering parts please have the machine model (type) and serial number on hand. Refer to the machine data plate for this information.

Technical Support

For technical support please contact the Edge Technologies Service Department by phone at 314-692-8388 or by email edgeservice@edgetechnologies.com

Important information When calling for technical support please have the machine model (type) and serial number on hand. Refer to the machine data plate for this information.

2. Technical Information

2.1 Description of the Machine

The Rebel 102 SE is a PLC controlled, full servo automatic bar feeder designed to load and feed bar stock up to 4 inches in diameter.

Features of the Rebel 102 SE include:

- Mitsubishi PLC controller and drive system.
- All electrical operation, eliminating the need for shop air.
- Storage for spindle liners incorporated into the bar feeder base.
- An axial shifting device to allow the bar feeder to be moved away from the lathe spindle for maintenance or spindle liner changes with no loss of alignment.
- Soft load bar presentation to reduce the jarring effect of heavy bars dropping into the channel.
- Parameter driven fully automatic bar diameter adjustment and pusher thrust.
- Fixed piece feeding, sub-spindle mode and push to a stop methods of bar feeding.
- Return and wait function to reduce bar change time by up to 30%.
- Touch screen control panel with memory for 36 individual jobs.
- Easy to change pushers, diameters 10 and 19 (optional 8mm pusher available)

2.2 Machine Footprint

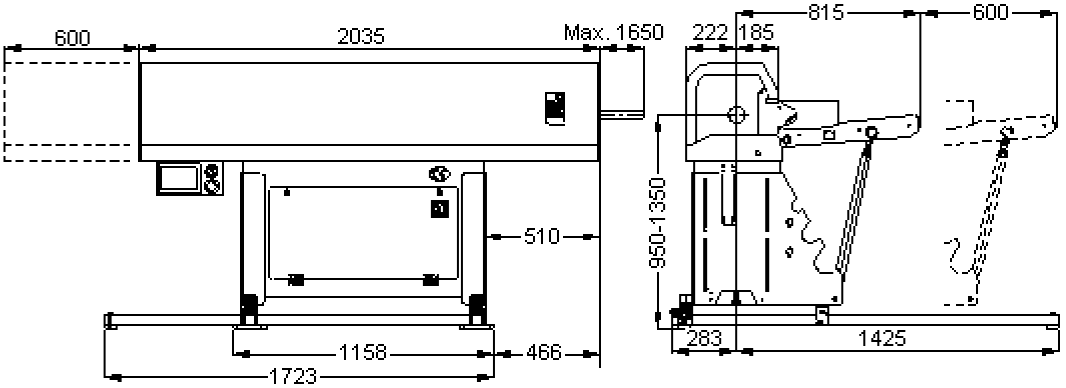

2.3 Specifications and Capacities

Bar diameter capacity	8mm to 102mm (.315” to 4.00”)
Maximum bar length	60” (NOT TO EXCEED SPINDLE LENGTH)
Magazine rack capacity	30” (60 ½” bars, 30 1.0” bars, 15 2.0” bars)
Bar weight	175 lbs. per bar not to exceed 1500 lbs. total
Power consumption	1 kW
Operating voltage	200-230VAC/60Hz – 3 phase
Control voltage	24VDC
Centerline height	950-1350mm (37.4” to 53.15”)
Machine footprint	84” X 48”
Machine weight	1100 lbs.

2.4 Bar Stock Requirements

Material should be relatively straight and clean. While bent stock will not necessarily cause problems within the lathe spindle while turning, it may prevent loading if bar condition is such that the bar collides with the back of the lathe spindle or it binds while feeding into the spindle. Bars of small diameter may not pick up properly from the magazine if they are not straight. Excessive chips, burrs or dirt may cause binding within the spindle.

The ends of the bar should be relatively straight to the diameter of the bar to help ensure proper positioning of the bar as it reaches the facing position and to keep the bar pusher from sliding off the bar while feeding the material.

⚠ **Under no circumstances should a bar be run that extends past the end of the lathe spindle! Failure to comply with this rule may result in injury or death to the operator or personnel in the vicinity of the machine and /or severe damage to the machinery!**

2.5 Safety

The bar feeder is designed to be safe and reliable to operate. However, the machine can be dangerous if used improperly by untrained personnel. Personnel should be familiar with the operating instructions of the equipment before using and must follow standard safety practices.

The bar feeder is equipped with safety devices to prevent accidental damage to the machine and injury to the operator. These devices must not be bypassed or tampered with.

2.5.1 Covers

The bar feeder is supplied with covers to prevent access to moving parts during operation. The hood of the bar feeder is equipped with a safety switch, S6, to place the machine in alarm if the hood is not closed. The magazine cover prevents access to the material on the rack and the bar separators.

2.5.2 Axial Shifting Switch

The bar feeder is equipped with an axial shifting device to allow the machine to be moved away from the lathe without losing the alignment. A safety switch, S27, on the axial shifting device prevents operation of the bar feeder if it is not in the proper position.

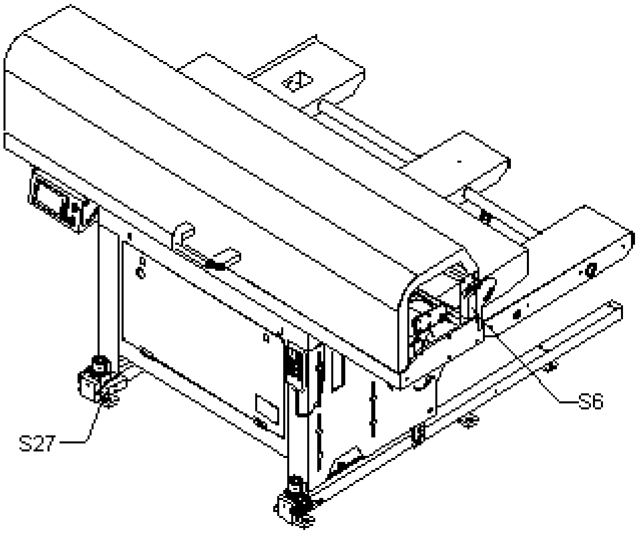

2.5.3 Lathe Door Safety

An input to the bar feeder for monitoring the lathe door is available. If used, this input will prevent movement of the bar pusher when the lathe door is open.

2.5.4 Emergency Stop Buttons

There are two emergency stop buttons on the bar feeder. Button ES1 is the emergency stop button on the HMI control panel housing. Button ES2 is the emergency stop button on the remote pendant control. Pressing either emergency stop button disconnects the Emergency Stop Relay. The emergency stop relay turns off relays MC1 and MC2 which disconnects power from the servo drive and the outputs from the bar feeder to the lathe.

Contacts from the emergency stop buttons are incorporated into the interface with the lathe emergency stop circuit to enable the lathe to be manually placed into emergency stop condition from the bar feeder control panel.

3. Transportation and Handling

Warning The weight of the bar feeder without packaging is approximately 1100 lbs. Verify the equipment to be used for moving the bar feeder is rated to safely lift the weight of the bar feeder plus the packaging material. Make special note that the bar feeder is top heavy and take proper precautions.

3.1 Lifting and Moving by Forklift

Lifting and moving the bar feeder by forklift is the preferred method of handling the machine. The machine should be moved only by personnel qualified in the operation of forklifts. The forks must extend past the machine cabinet, see the drawings below. Lift the machine from the side opposite the magazine maintaining sufficient clearance from the forklift mast to avoid contact. Care should be taken to keep the load balanced. Do not lift the machine any higher than necessary.

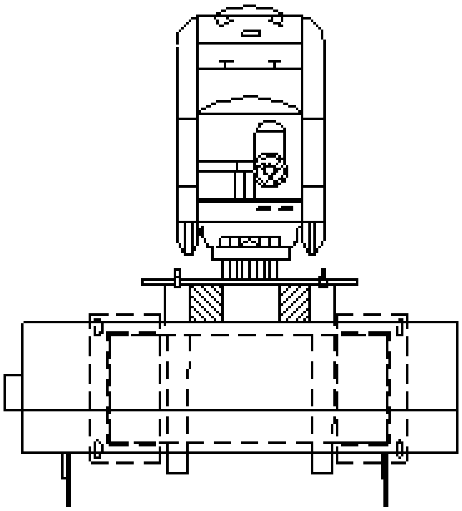

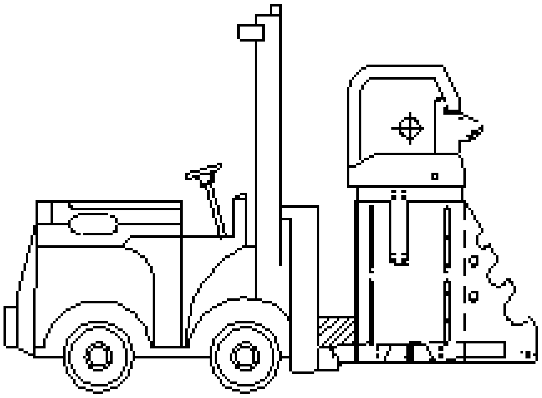

3.2 Lifting with a crane

Lifting and moving the bar feeder with a crane is possible if a forklift is not available. The crane must be capable of lifting at least 1,100 lbs. The machine should only be moved by personnel qualified in the operation of the crane. Two padded lifting bars that extend at least 12 inches past the sides of the cabinet are required. Ideally the lifting bars will have eyebolts attached. The lifting bars are placed under the pan of the bar feeder next to the electrical cabinet (see diagram). The lifting straps or chains should be padded to prevent damage to the sheet metal covers. The machine should be lifted slowly a short distance. The balance should be checked and adjusted if necessary before continuing. Never lift the machine higher than necessary.

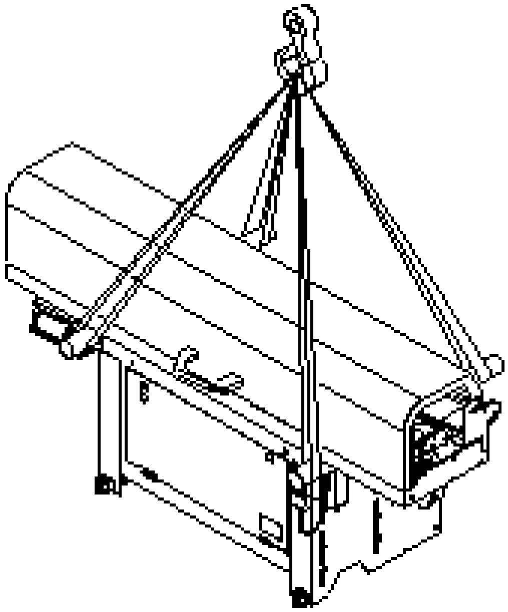

4. Installation

Caution The following instructions should be carried out only by skilled, trained personnel. Proper alignment and installation is crucial to achieve optimal performance of the bar feeder. Improper alignment can cause difficulty during loading, damage to the bar feeder and damage to the actuator and spindle bearings on the lathe.

4.1 Lathe Preparation

Prior to beginning the bar feeder installation the lathe must be properly leveled. It is strongly recommended that the lathe be anchored to the floor to prevent it from shifting.

4.2 Distance From Lathe

The bar feeder should be placed as closely as possible to the rear of the lathe while maintaining sufficient clearance to allow the bar feeder to be moved on the axial shifting device. The area to be occupied by the bar feeder while shifted away from the lathe should also be checked for sufficient clearance. The maximum pusher extension from the front of the bar feeder is 1650mm (64.96”).

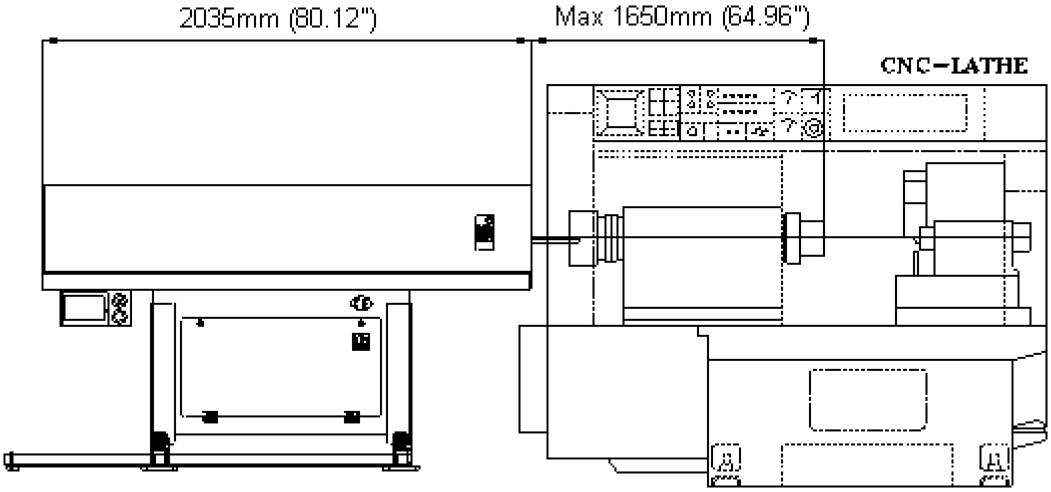

4.3 Axial Shifting Device

The axial shifting device can be configured to move the bar feeder away from the lathe either parallel or perpendicular to the spindle axis. No additional parts are required for changing direction of the axial shift.

4.3.1 Prepare the axial track slide

- Begin by placing the axial track slide rails on the floor.
- Locate and fasten the foot lock cross rail to end of the axial track rail sides that would be the open hood side of the bar feeder.
- Locate and fasten the cross rail rod between the rear of axial track slide rails.
- Be sure to loosen the 4 axial track jack screws so there is zero preload on the floor.
- Loosen the socket head cap screws that fasten the mounting lock plate to the axial track slide rail, then press lock plate up so there are no gaps between the axial track bottom then tighten screws.

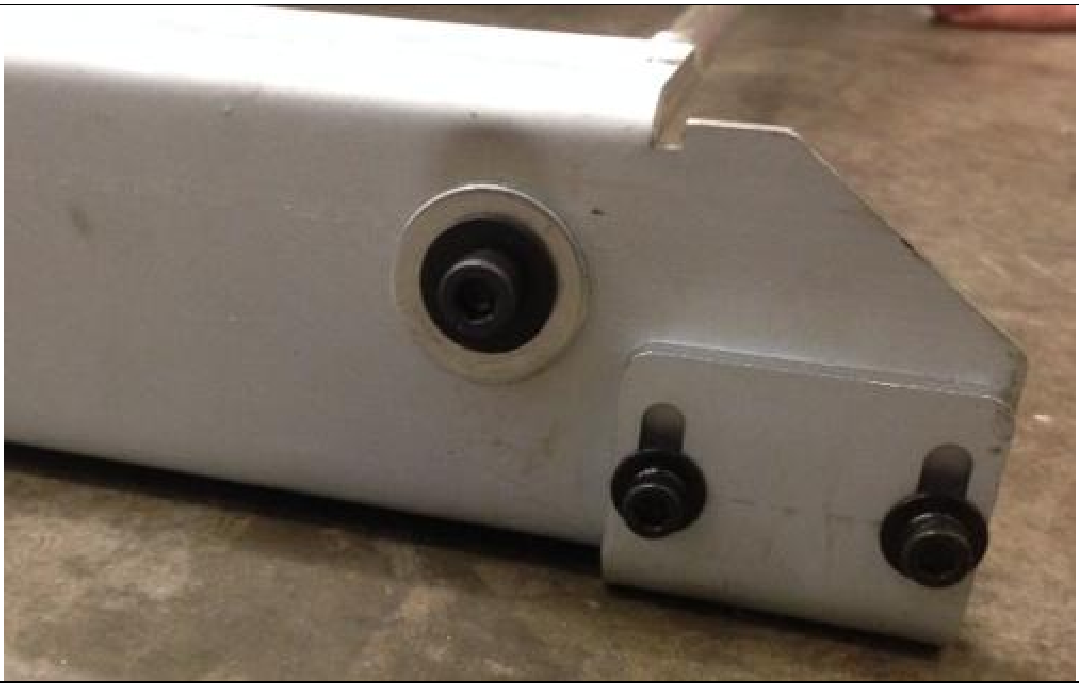

- Raise and support the bar feeder to install the axial track roller slides to the base of the bar feeder.
- Once axial track roller slides are installed place bar feeder onto axial track slide rails. Be sure the roller bearings engage the slide track.
- Position bar feeder to the full forward position on the axial track and lock into place with the foot lock cross rail.
- It may be necessary to adjust lock stops on the foot lock cross rail so there is no movement of the bar feeder once locks are engaged. Be sure it does not require excessive force to lock or unlock the bar feeder with the foot lock rail. There should be just enough force to remove bar feeder movement when locked.
- Attach the axial track switch to the left front, under side of the bar feeder. Adjust switch cam to contact the switch roller.
- Position the final install position of the bar feeder and axial track assemble and perform alignment. See section 4.5 for alignment procedure.

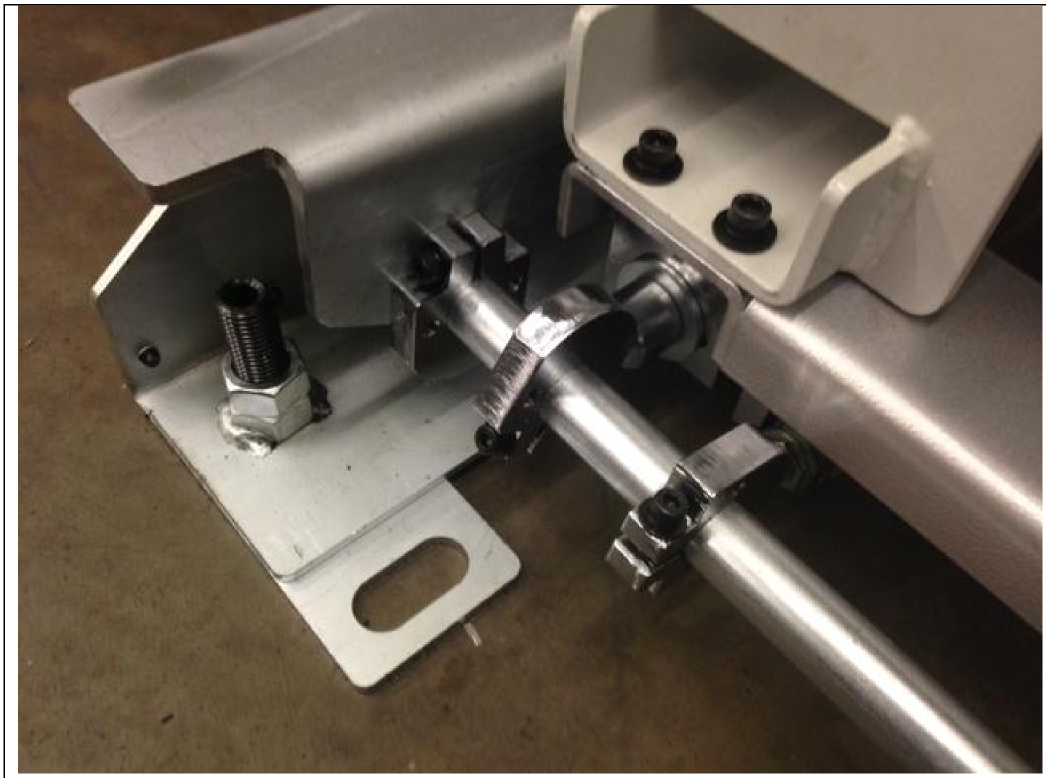

The axial track in position switch (LS03) is on the inside of one axial track. The two latches are mounted to the outside of the tracks.

The tracks should be leveled in both the X and Z axis. Keep the rails as close as possible to the floor.

Caution

The magazine is heavy and will require a minimum of two people to install.

4.4 Magazine attachment

The magazine is not attached during shipment and must be installed on site. Before lifting the magazine, loosen screws 2 (2 places) and remove screws 1 (3 places). Attach the two braces with the bolts (5). Lift the magazine and slide it into the feeder so the center section is between the bar lifters (2). Thread the screws of the braces into the nuts on the underside of the magazine (4). Secure the magazine with the 3 screws (1). Adjust the magazine to the proper level for the diameter and profile of the material to be run (See section 5).

Caution Magazine angle adjustment should never exceed 20 degrees or damage to material fingers will occur.

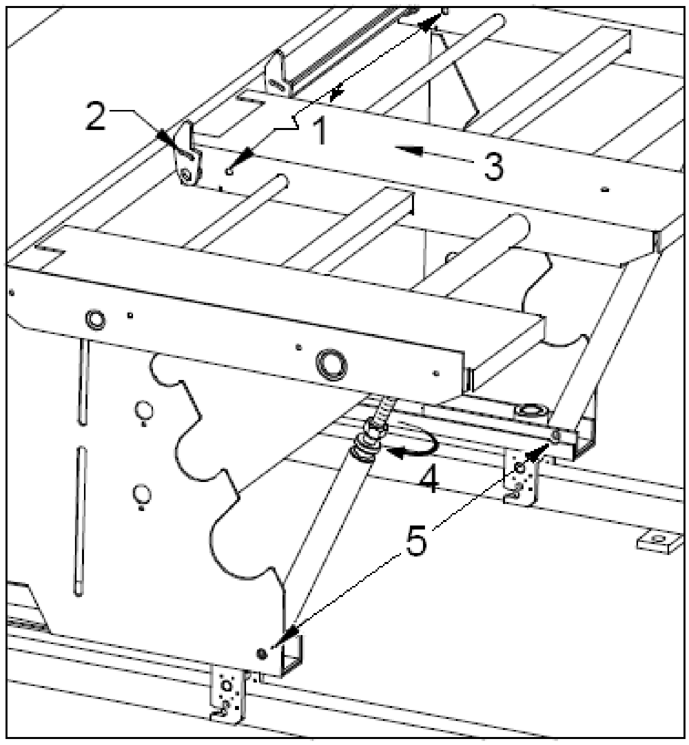

Caution

Do not attempt to move the bar feeder alignment when the bar stock or the bar pusher are extended into the lathe spindle. Damage to the bar pusher or lathe spindle may occur.

4.5 Alignment

The preferred and most precise method of bar feeder alignment is with the **Edge Technologies Laser Alignment kit**, part number **EZ90001** by contacting Edge Technologies Parts department at **(314) 692-8388** or email **edgeservice@edgetechnologies.com**

4.5.1 Alternate method of alignment

Elevation of the bar feeder is adjusted by the two jack screws located at the center of each stand. Loosen the four bolts securing the leg to the stand (1). Turn the jack screw (2) to raise or lower the bar feeder center height. The side-to-side alignment is set by sliding the bar feeder on the floor.

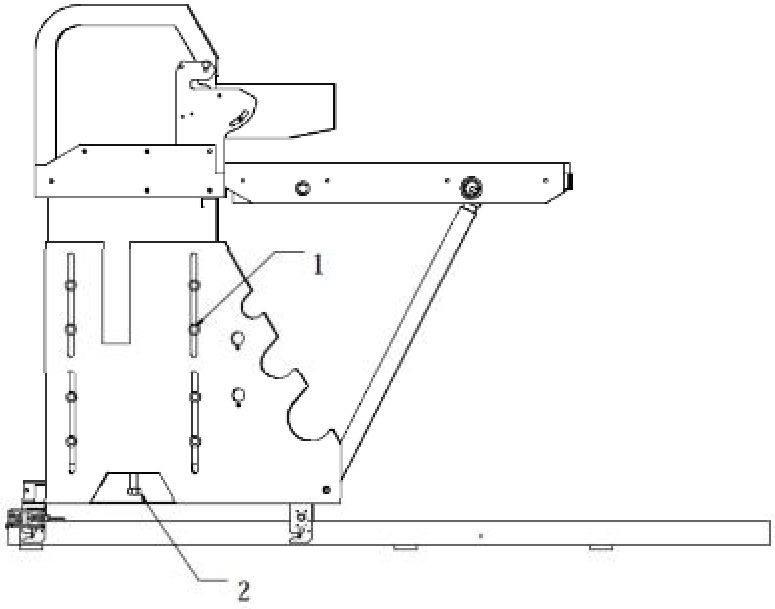

- Choose a straight piece of bar stock with a diameter as close as possible to the bore of the lathe spindle.
- In the bar feeder parameters enter the bar length.

- Place the bar on the V-tray and raise the V-tray to position using the tray up button.
- Slide the stock toward the spindle.
- Look into the spindle from the chuck end and observe the ring of light around the bar stock. Move the bar feeder so the ring is equal all around the stock.
- Once the bar is centered at the end of the spindle push it into the lathe.
- Looking through the spindle from the chuck the goal is to have the bar equally spaced from the sides.
- The bar will rest on the bottom of the bore as it moves further into the spindle. This is not a problem as long as the bar moves freely.

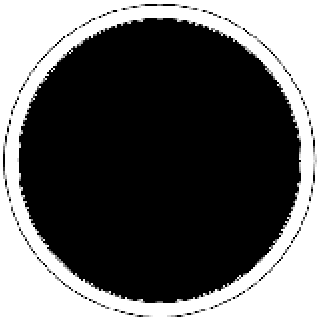

Bar centered in spindle

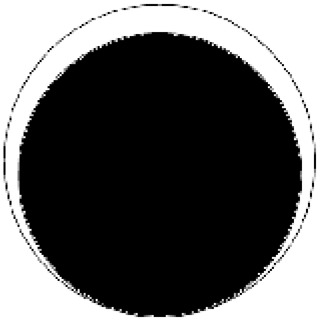

Resting on bottom of spindle

4.6 Anchoring the bar feeder

When the alignment is correct the bar feeder must be anchored to the floor to prevent it from moving out of position. The bar feeder is supplied with ½” diameter anchor bolts to secure the axial track to the floor. It is recommended to drill the holes for the anchor bolts through the floor if possible or at least as deep as the anchor bolt is long so that the bolt may be driven flush with the floor should the machine need to be moved. Alignment should be rechecked after anchoring the bar feeder to the floor to make sure the alignment has not changed.
Small adjustments to the alignment can be made by the leveling nuts on the leveling feet.

4.7 Electrical connection

The power for the bar feeder and the input and output signals between the bar feeder and lathe are supplied through the interface cable. The interface cable is pre-wired for the lathe application. The installer should verify the connection to the lathe before applying voltage to the system. If the lathe is not equipped with an interface connection for the bar feeder a plug and cables will be supplied. The lathe must support a magazine type bar feeder interface for the machines to be connected.

Caution Failure to follow the procedure in section 4.8 may result in damage to the magazine feed motor and linkage.
This procedure is for the initial setup only and should not be performed again unless instructed to do so by the Edge Technologies service department.

4.8 Initial magazine finger adjustment

- Remove any stock from the magazine.
- From the User Level 1 screen select Maintenance screen, enter password as required.

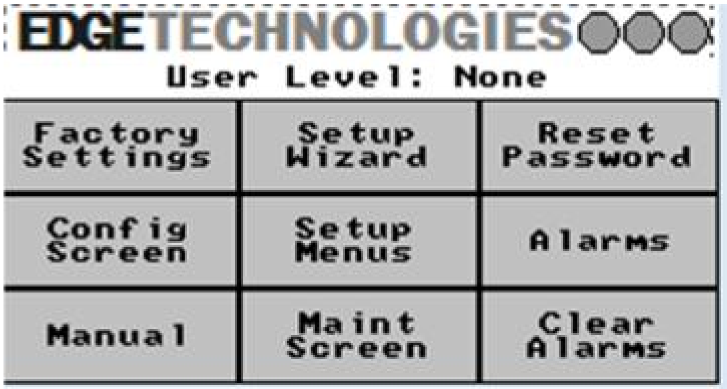
EDGETECHNOLOGIES
Factory Settings
Setup Wizard
Reset Password
Config Screen
Setup Menus
Alarms
Manual
Maint Screen
Clear Alarms

User Level: None

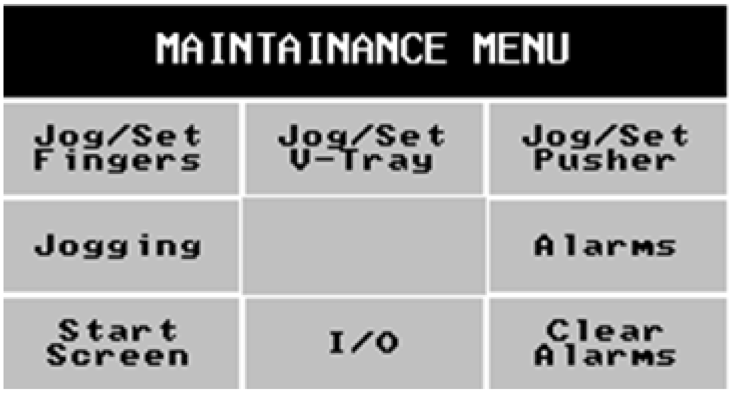
MAINTAINANCE MENU
Jog/Set Fingers
Jog/Set V-Tray
Jog/Set Pusher
Jogging
Alarms
Start Screen
I/O
Clear Alarms

- Select Jog/Set Fingers.

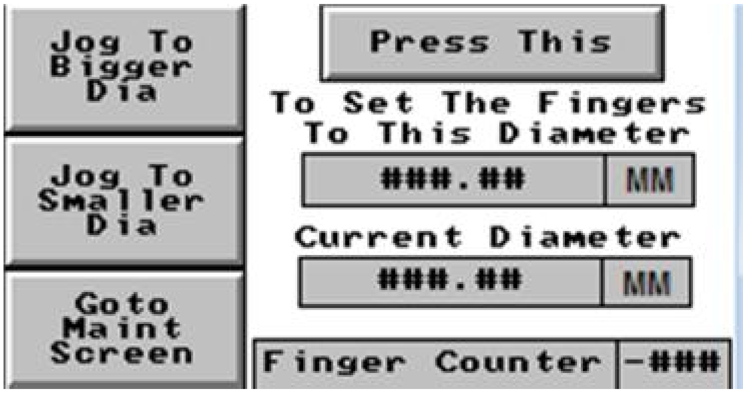
Jog To Bigger Dia
Jog To Smaller Dia
Goto Maint Screen
Press This
To Set The Fingers To This Diameter
###.## MM
Current Diameter
###.## MM
Finger Counter -###

- Select a bar diameter between 8mm-40mm measure and record as this number will be input to. Place the bar on the magazine against the fingers.
- Using and adjust the fingers so the vertical face of the V-Tray tabs are just smaller than the bar diameter. On larger bar you will not be able to get the bar in a under flush position due to capacity restraints. As an option V-Tray up and down buttons on the pendant may be sued to move fingers.
- Once the proper position has been determined select the number pad and input the diameter of the bar and select ENT.

Jog To Smaller Dia
Jog To Bigger Dia

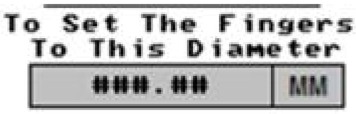
To Set The Fingers To This Diameter
###.## MM

- To store the value select

- The current diameter will update to the diameter of the bar.
- Select “Go to Maint Screen” to exit

The ideal position of the fingers is to have a just under flush position adjustment and to only pick up one bar upon V-Tray loading. If the bar behind the bar being loaded jumps out of place or tries to load with the loading bar, check bar stock diameter value in the part program is correct for the bar size in use. If bar diameter is correct the restart finger set procedure.

4.9 Resetting the bar pusher home procedure:

Any time pusher has been moved manually without power to the bar feeder it is possible to lose the home position. Please follow the procedure below to reset the home position.

- From the User Level 1 screen select “Maint Screen” and enter password.

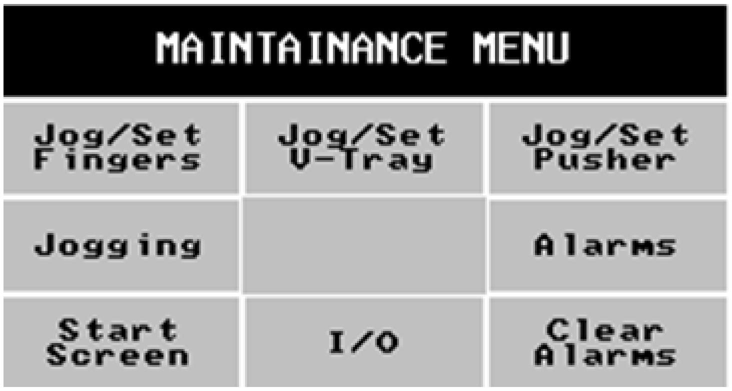
MAINTAINANCE MENU
Jog/Set Fingers
Jog/Set V-Tray
Jog/Set Pusher
Jogging
Alarms
Start Screen
I/O
Clear Alarms

- Select “Jog/Set Pusher”

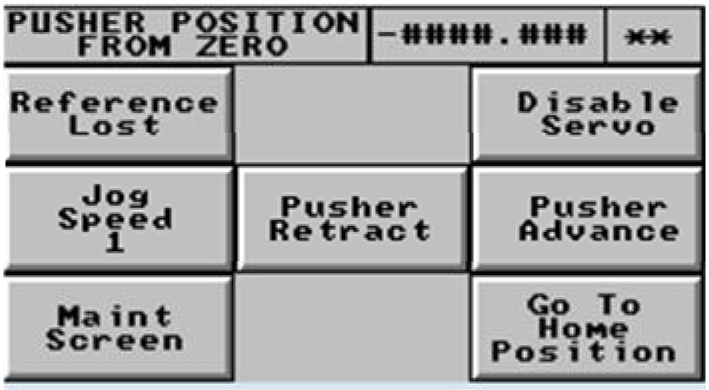
PUSHER POSITION FROM ZERO
-####.###
**
Reference Lost
Disable Servo
Jog Speed 1
Pusher Retract
Pusher Advance
Maint Screen
Go To Home Position

- Position pusher approximately 1 inch from the home position with pendant. Select "Reference Lost". If reference is not lost this will read "Reference OK". The movement of the pusher back to home position is very slow during the referencing. If the pusher is further from home procedure will take longer.

Additionally the "Set/Jog Pusher" screen allows for additional testing functions.

- **Pusher Advance:** Advances the pusher
- **Pusher Retract:** Retracts the pusher
- **Jog Speed:** Toggling through speeds 1 through 5 will increase and decrease the pusher retracting and pusher advancing functions.
- **Go To Home Position:** Pusher retracts to referenced home position.

5 Adjustment and Settings

5.1 Adjustment of Magazine Angle

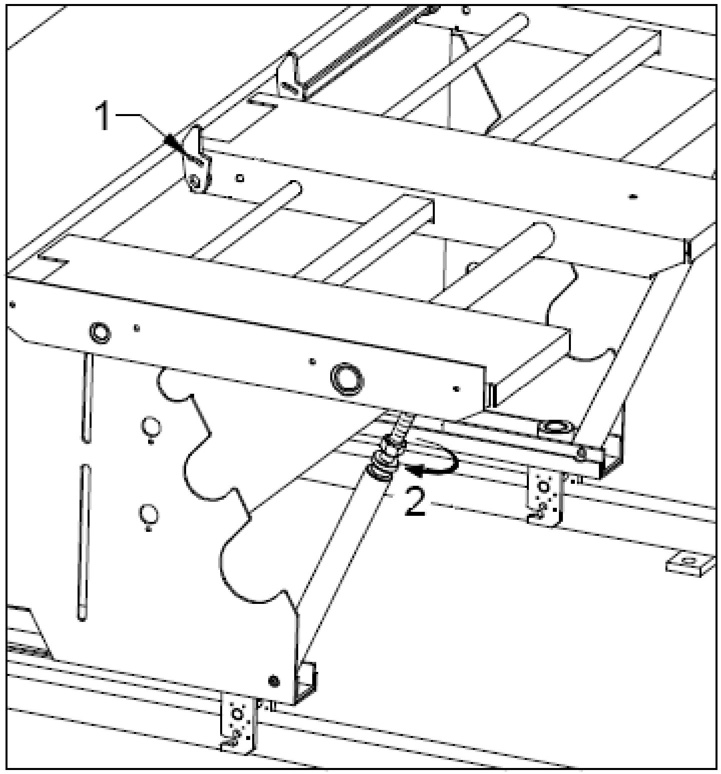

The magazine angle should be set according to the shape and weight of the material used. Generally the magazine incline should be set in the range of 5 to 10 degrees for round stock, keeping in mind that the heavier materials require less incline. For hex shaped material the incline should be set to around 20 degrees. **Never exceed 20 degrees or bar feeder damage will occur.**

The magazine incline is adjusted by first loosening the screws (1), then turning the nuts (2) to reach the desired angle. Tighten the screws (1) when finished. Both of the braces should be set the same to keep the magazine level from side to side.

5.2 Changing bar pushers

To change the bar pusher, start with the V-channel in the down position. Remove the 3 screws that hold the front bushing in place and slide the bushing onto the bar pusher. At the rear hub of the pusher, flip the selector cam out of the notch to release the bar pusher from the carriage. Slide the bar pusher forward far enough to be able to raise the rear of the pusher clear of the carriage. Pull the pusher backward to clear the front plate and lift and the bushing out of the machine.

Installation of the bar pusher is the process in reverse. Slide the front of the pusher into to hole for the bushing, slide the pusher hub into place and flip the selector cam into the notch. Slide the bushing into place and replace the 3 screws.

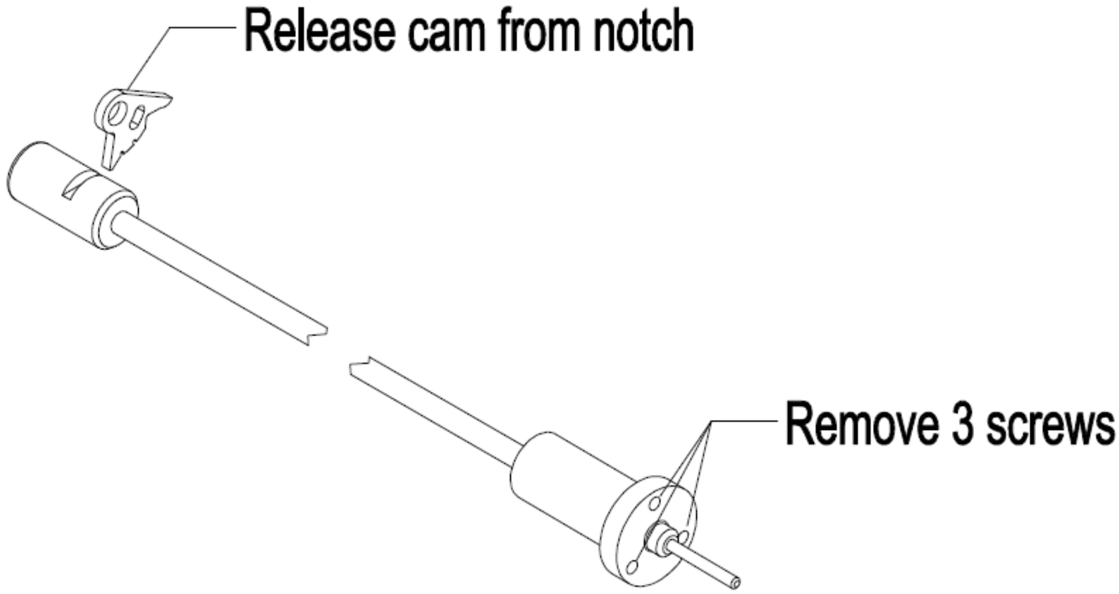

5.3 Axial Shifting

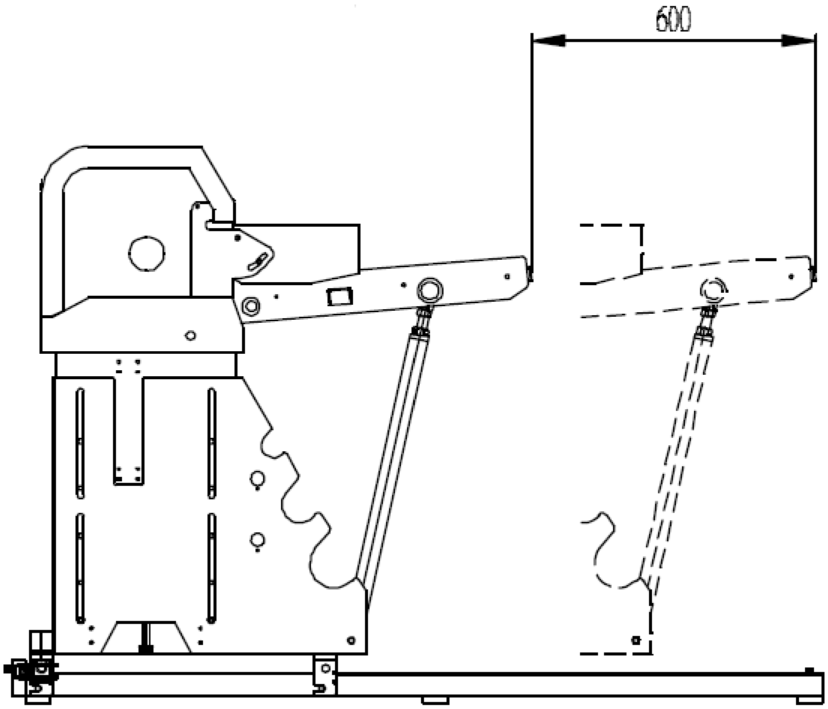

The axial shifting device allows the bar feeder to be moved away from the lathe in either the X axis (shown) or the Z axis depending on the customer's preference at time of set-up. The bar feeder can then be returned to its original position without loss of alignment. **To move the bar feeder on the axial shifting device the pusher must be retracted to the home position**. Release the foot lock cross rail holding the bar feeder in place on the axial track. Push the bar feeder away from the lathe. Stops on the axial track will prevent the bar feeder from traveling beyond a safe distance. Once the axial track safety switch is disengaged the bar feeder will disable automatic mode functions.

To move the bar feeder back into position simply push the feeder back in line with the lathe until it comes to rest against the stops. Engage the foot lock cross rail and the bar feeder will be back in alignment with the lathe spindle and ready to run.

6. Rebel 102 SE Remote Pendant

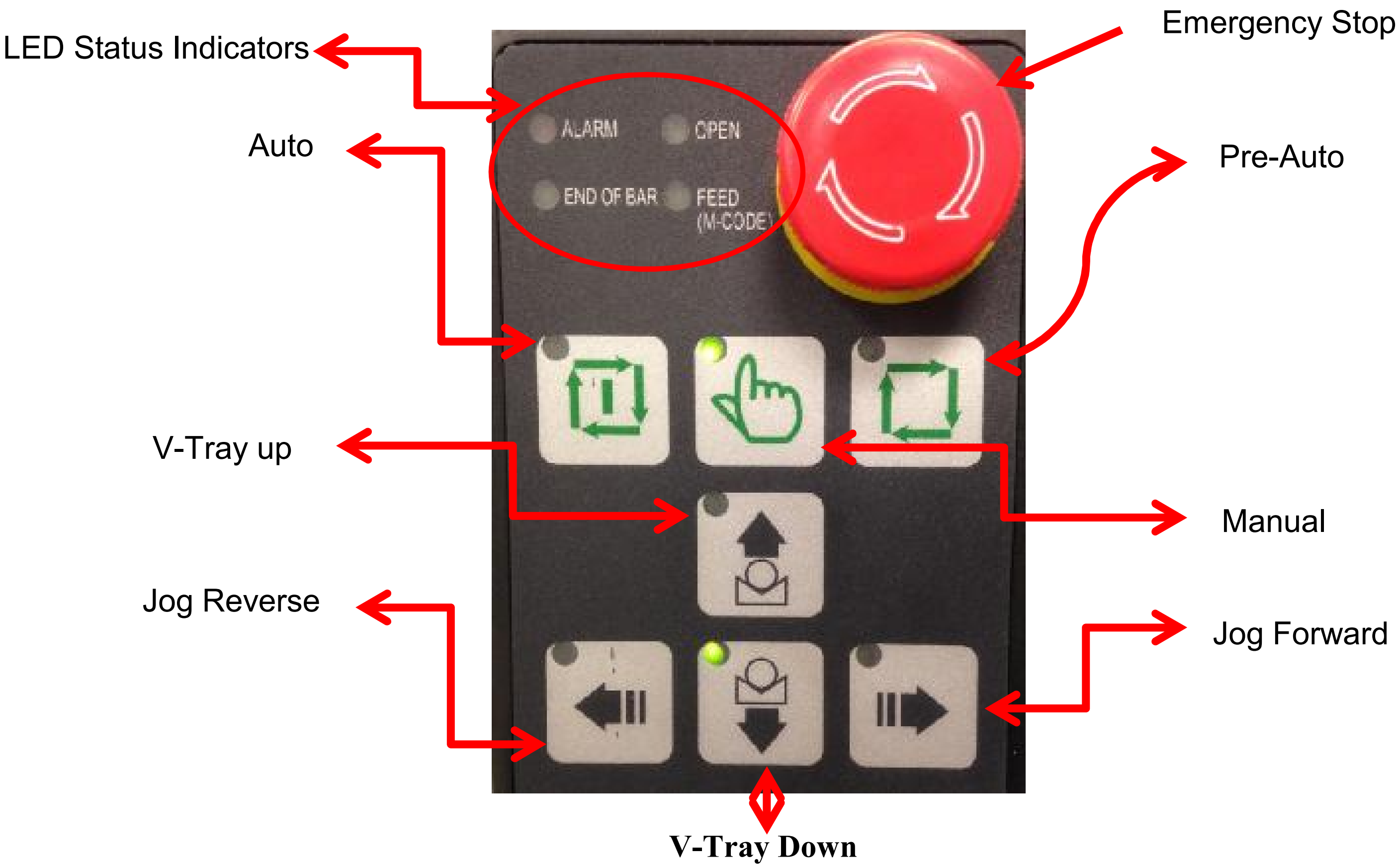
LED Status Indicators
Emergency Stop
Auto
Pre-Auto
ALARM
OPEN
END OF BAR
FEED (M-CODE)
V-Tray up
Manual
Jog Reverse
Jog Forward
V-Tray Down

6.1 Control Pendant Functions

6.1.1 Status LEDs

- Feeder Alarm-- Bar feeder is currently in error
- Collet Open-- Lathe collet is open
- End of bar-- The bar feeder is currently at the end of its feeding cycle and will need to perform a bar change.
- Feed (M-code) -- The bar feeder is currently feeding with an M-Code signal

6.1.2 Pusher Jog Buttons

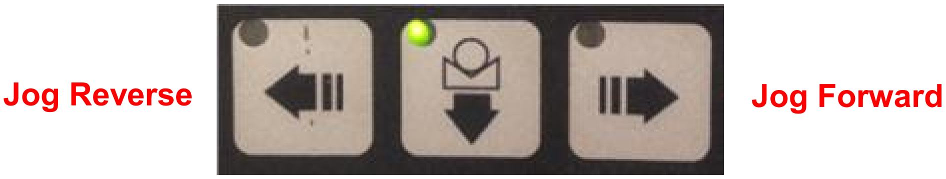
Jog Reverse
Jog Forward

These buttons allow the operator to jog the bar pusher and pre-feed pusher in forward and reverse.

6.1.3 V-Tray Up and Down Buttons

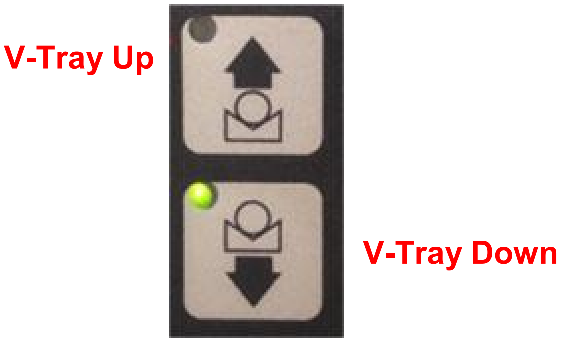

These buttons allow the operator to jog the V-Tray up and down. When jogging up the **limit of rise** is controlled by the stock diameter listed in the parameters in the current bar feeder program.

6.1.4 Pre-Auto and Automatic/ Manual Buttons

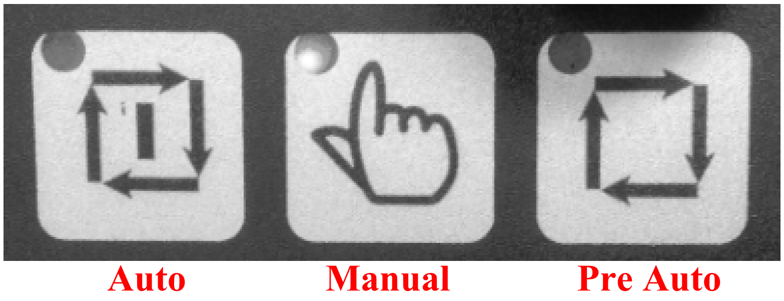

These buttons allow the operator to change between manual and automatic modes without going back to the HMI each time. To place the bar feeder in automatic mode the operator must first press the Pre-Auto button, then the Automatic button. Manual mode is selected by pressing the Manual button alone.

6.2 Sequence for Manually Changing Bars

6.2.1 Unload bar from lathe

- Remove the bar stock from the lathe spindle by following these steps.
- Retract the bar pusher to the home position using the reverse jog button.
- Raise the channel by pressing and holding the Channel Up button.
- **PUSH THE MEASURING FLAG DOWN** to prevent damage from the bar in the spindle.
- Push the bar stock from the spindle onto the channel.
- Remove the stock from the channel.
- Lower the channel by pressing and holding the Channel Down button.

6.2.2 To load a new bar

- Load a bar onto the magazine.
- Raise the channel with the Channel Up button. The bar will fall onto the channel as it rises.
- Push the bar forward to the limit of the pre-feed pusher using the forward jog button.
- Retract the pre-feed pusher using the reverse jog button.
- Lower the channel with the channel down button.
- Push the bar into the lathe collet / chuck using the forward jog button.
- Close the lathe collet.
- Retract the bar pusher to the home position.

A new bar may also be loaded semi-automatically by using the “Bar On” button on the HMI. See section 6.3.8 for details on this feature.

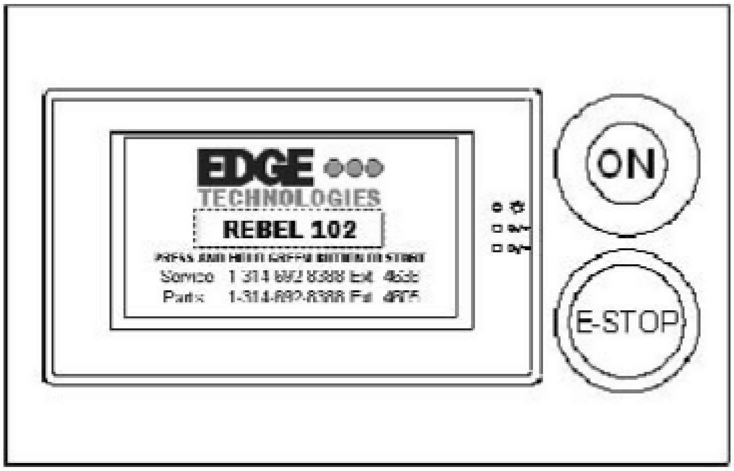

6.3 HMI (Control Panel)

The HMI is a microprocessor based, touch screen unit that receives the user input commands directly through the touch screen. There are many obvious defined buttons or keys when pressed an action of some type appears on screen. There are undefined buttons or keys when a value or description is pressed an action of some type appears on screen. Understanding this function of the HMI will help you in operating the bar feeder.

6.3.1 Starting the Bar Feeder

When the voltage from the lathe is supplied to the bar feeder the above screen will be displayed. Press and hold the green button to start the bar feeder. When the bar feeder starts the green light on the start button will illuminate. Touch the HMI screen to clear the fault shown. The display will change to the User Level 1 screen as shown below.

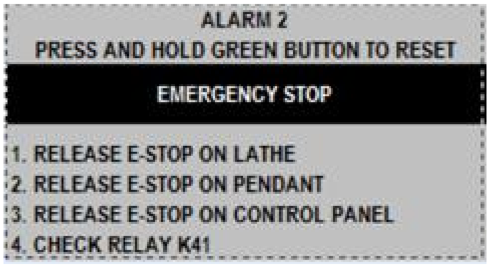
ALARM 2

PRESS AND HOLD GREEN BUTTON TO RESET

EMERGENCY STOP

1. RELEASE E-STOP ON LATHE
2. RELEASE E-STOP ON PENDANT
3. RELEASE E-STOP ON CONTROL PANEL
4. CHECK RELAY K41

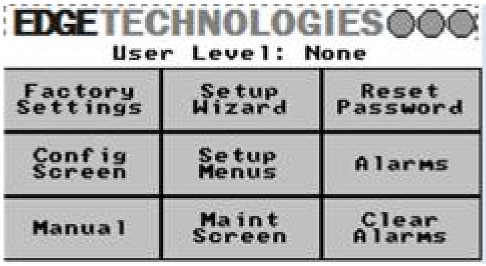
EDGE TECHNOLOGIES
User Level: None
Factory Settings
Setup Wizard
Reset Password
Config Screen
Setup Menus
Alarms
Manual
Maint Screen
Clear Alarms

6.3.2 Setting the Measurement standard inches or millimeters.

The bar feeder can measure distance in inches and millimeters. The easiest way to change the measurement standard is from the manual or automatic screens. Selecting the distance readout on the screen the standard will change, following image. This change will affect all of the HMI parameter screens.

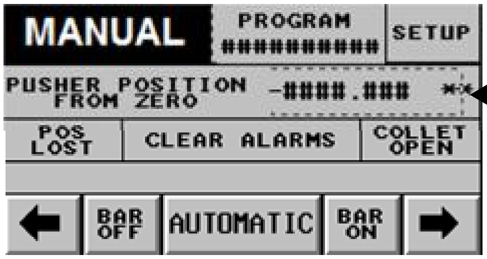
MANUAL
PROGRAM ##########
SETUP
PUSHER POSITION FROM ZERO
-####.###
**
POS LOST
CLEAR ALARMS
COLLET OPEN
BAR OFF
AUTOMATIC
BAR ON

Select this area to toggle between inches and metric.

6.3.3 Manual Screen Functions

From the user Level 1 screen select “Manual”

The manual screen provides information about the current mode of the bar feeder, the active program number of the feeder, the location of the bar pusher from the home position, the position of the V-channel, the status of the lathe collet and the current or last completed operation of the control.

Buttons on the panel include the setup button for selecting an existing program to load or edit or for creating a new program. The bottom section of the screen has forward and reverse jog arrows, bar on and bar off function buttons and a button to select the automatic mode.

6.3.4 Passwords

Upon initial power up and installation of the bar feeder the HMI contains various levels of parameter settings used by the setup technician and for the operator or end user and are set to on or off at that time. This includes password protection for the following areas,

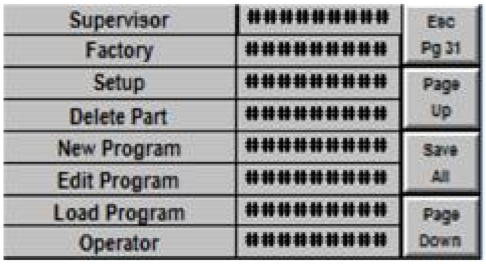
Supervisor ##########
Factory ##########
Setup ##########
Delete Part ##########
New Program ##########
Edit Program ##########
Load Program ##########
Operator ##########
Esc Pg 31
Page Up
Save All
Page Down

It is important for the installation technician to know if the customer will be using password protection or not. Passwords can be set up to 9 digits in length.

Passwords are typically assigned and given to an upper level manager, shop foreman or whom the customer assigns. If the passwords are somehow lost please call **EDGE Technologies Service Department.**

6.3.5 Program Button

The HMI can store up to 300 part programs.

To select an existing program press the Program button. Enter the required password when prompted. The display will show the program menu screen with the first 8 program file locations. Select the part program number required. If the program number you are trying to recall is not displayed select “Load and Save Parts”.

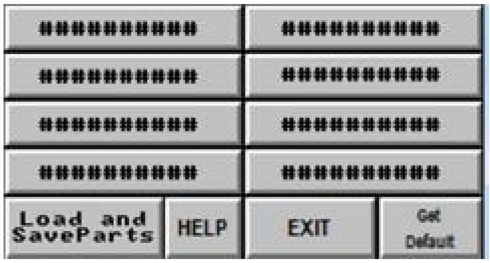
###########
###########
###########
###########
###########
###########
###########
###########
Load and SaveParts
HELP
EXIT
Get Default

Pressing the up/down or groups of 10 and 100 keys will scroll through the file location number displayed in the upper right corner, at the same time “Selected part number” will display the part program number saved to the respected file location number. Once the desired part program number is displayed select “Get part” button

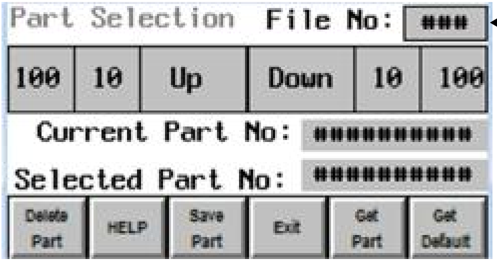
Part Selection
File No: ###
100
10
Up
Down
10
100
Current Part No: ###########
Selected Part No: ###########
Delete Part
HELP
Save Part
Exit
Get Part
Get Default

File location number

Select “yes” when prompted to load part. Manual screen will then appear.

Note: It is important to understand the difference between a part program number and a file location number. A Part program number is assigned during initial part parameter setting. File location is the saved location number of a part program.

In order to edit or create a new program refer to the Part Parameter section later in this manual.

6.3.6 Forward and Reverse Jog Buttons

← → Buttons on the lower left and right corners allow the operator to jog the pusher backward to the home position or forward to the limit set by the parameters.

6.3.7 Bar Off Button

BAR OFF Pressing the Bar Off button will initiate the following steps;
- The bar pusher retracts to the home position.
- The V-Tray will raise, picking up a bar from the magazine and carrying it up to the loading position.

6.3.8 Bar On Button

Note: Lathe collet or chuck must be open for bar on.

BAR ON Pressing the Bar On button will mimic the operations of loading a new bar in the Automatic mode. The steps performed are;
- The bar pusher retracts to the home position.
- The V-Tray will raise, picking up a bar from the magazine and carrying it up to the loading position.
- The pre-feed pusher moves the bar into the lathe spindle.
- The pre-feed pusher retracts.
- The V-Tray lowers.
- The bar pusher moves the bar to the facing position.
- At this point the operator can close the lathe collet and press the Automatic button to switch the bar feeder to Automatic mode.

6.3.9 Automatic Button

AUTOMATIC The center button on the bottom of the screen is used to change the mode of the bar feeder from Manual to Automatic.

The upper left corner of the screen indicates the current mode. When the Automatic function is selected the bar feeder enters a measuring process to find the end of the bar stock and recalculate the remaining number of pieces left on the bar. The measurement is also needed for the bar feeder to determine the end of the rapid travel forward when the signal is activated.

The lathe collet must be closed before the measuring process can begin. If the collet is not closed the bar feeder screen will display a message instructing the operator to close the collet. The “Bar Feeder in Automatic” signal to the lathe will not be given until the measurement cycle is completed.

6.3.10 Automatic Screen Functions

The Automatic screen allows the operator to monitor the location of the bar pusher and the remaining number of parts that can be made from the material in the lathe spindle by selecting the selecting dual active switch. Whichever parameter is active touching the key will change to the next parameter. As on the Manual screen the status of the lathe collet, channel position and active program number are displayed. The banner above the Manual button shows the current operation of the bar feeder.

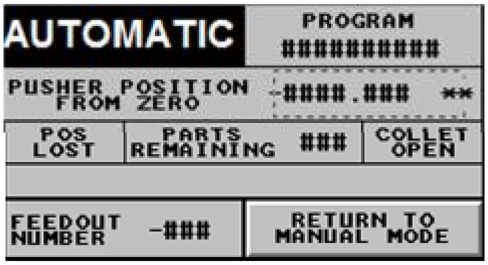

The bar feeder can be switched from Automatic mode to Manual mode by pressing the “Return to Manual mode”. This is the only function that can be controlled from this screen. The remainder of the screen is for status monitoring.

Setup Wizard Screens The Setup Wizard Screens provide a simplified method of creating a bar loader program by entering values in the following screens. A complete list of the operating parameters can be found in section 8. To start the Setup Wizard select the Wizard button. Follow the screens to create a new part program.

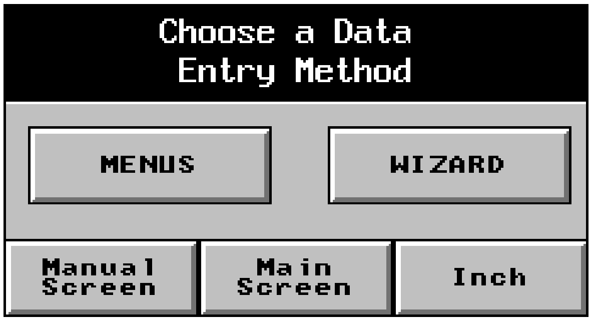

Choose a Data Entry Method

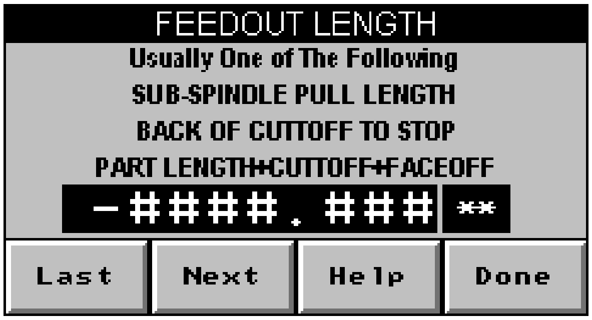

FEEDOUT LENGTH

Usually One of The Following

SUB-SPINDLE PULL LENGTH

BACK OF CUTTOFF TO STOP

PART LENGTH+CUTTOFF+FACEOFF

-####.### **

Feed out Length: This parameter is usually set to the value of the (overall part length + the width of the cut-off tool + any facing stock). The value is used to determine if enough material is left on the bar stock to make another part. If the material is advanced using a sub-spindle the value would be set to equal the total length of the sub-spindle movement when the lathe collet is open.

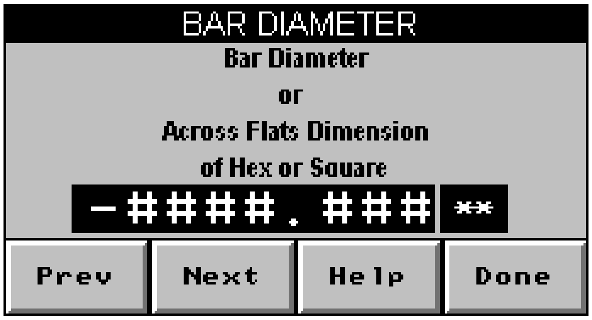

BAR DIAMETER

Bar Diameter

or

Across Flats Dimension

of Hex or Square

-####.### **

Bar Diameter: The parameter is used to set the height of the V-tray to match the centerline of the lathe spindle. Enter the diameter of round stock or the measurement of the distance across the flats for hex and square material.

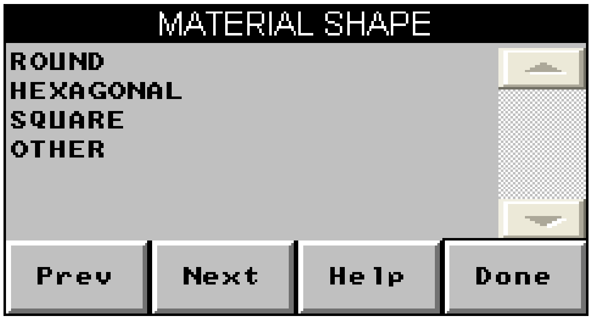

MATERIAL SHAPE

ROUND
HEXAGONAL
SQUARE
OTHER

Material Shape: Select the shape of the material to be run. The selection is used along with the bar diameter setting to set the height of the V-tray to match the centerline of the lathe spindle.

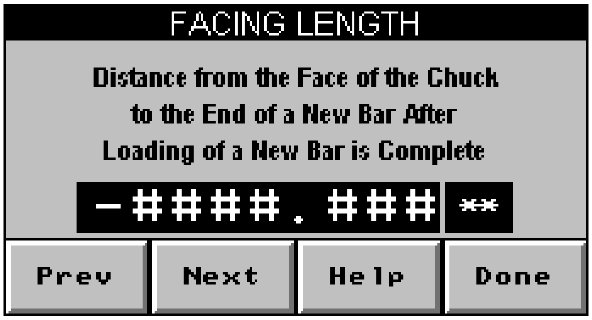

FACING LENGTH

Distance from the Face of the Chuck
to the End of a New Bar After
Loading of a New Bar is Complete

-####.### **

Facing Length: The parameter allows the user to set the distance the new bar will stick out of the chuck or collet at the end of the bar load sequence.

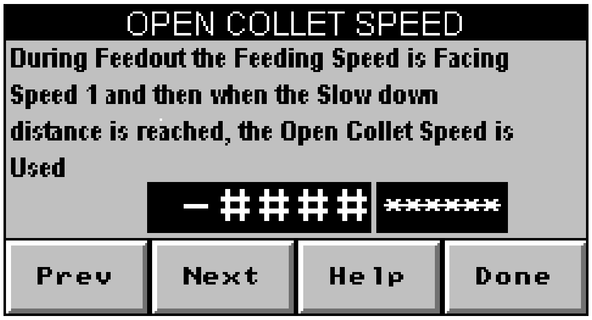

OPEN COLLET SPEED

During Feedout the Feeding Speed is Facing Speed 1 and then when the Slow down distance is reached, the Open Collet Speed is Used

-#### ******

Open Collet Speed: Sets the forward speed of the bar pusher in the automatic cycle.

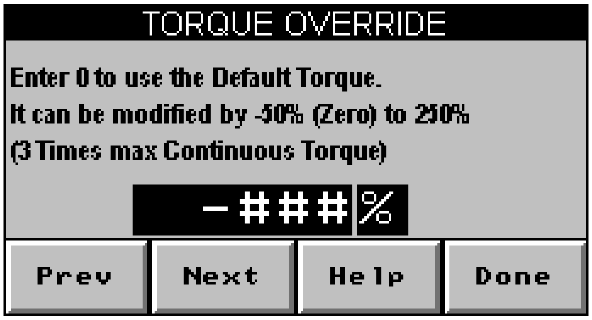

TORQUE OVERRIDE

Enter 0 to use the Default Torque.
It can be modified by -50% (Zero) to 250%
(3 Times max Continuous Torque)

-###%

Prev
Next
Help
Done

Torque Override: Sets the amount of force applied to the bar stock during the automatic cycle.

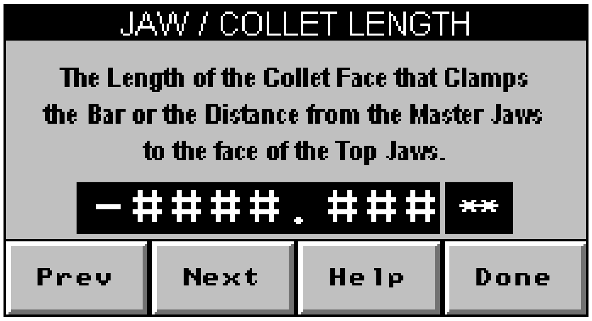

JAW / COLLET LENGTH

The Length of the Collet Face that Clamps
the Bar or the Distance from the Master Jaws
to the face of the Top Jaws.

-####.### **

Prev
Next
Help
Done

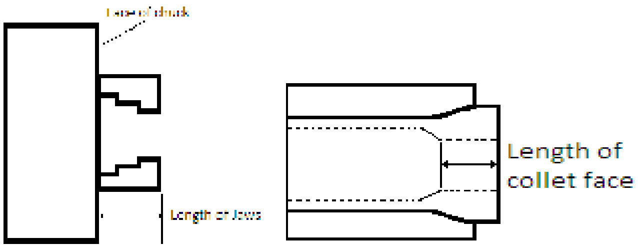

Face of chuck
Length of Jaws
Length of
collet face

Jaw / Collet Length: The jaw or collet length is used in the calculation of the facing position. The measurement for a jaw chuck the distance from the end of the jaws to the face of the chuck plate. The measurement for a collet chuck is the length of the ID of the collet that holds the material.

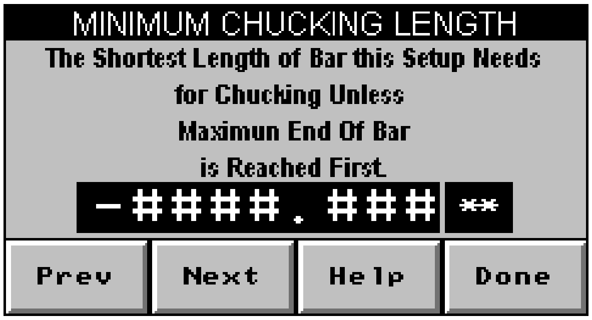
MINIMUM CHUCKING LENGTH

The Shortest Length of Bar this Setup Needs
for Chucking Unless
Maximun End Of Bar
is Reached First.

-####.### **

Minimum Chucking Length: This parameter is used to set the minimum portion of the gripping surface used of the chuck jaw or collet pads. It is usually set to the full length of the gripping surface. Should the length of the gripping surface be unusually long this parameter will allow the user to designate a lesser portion of the surface to be used while still maintaining a safe hold on the material to be machined. The bar feeder will use this dimension to recalculate the maximum forward travel distance of the bar pusher.

CAUTION: SETTING THIS PARAMETER AT A VALUE THAT IS TOO SMALL MAY CAUSE THE MATERIAL TO BE THROWN FROM THE LATHE CHUCK.

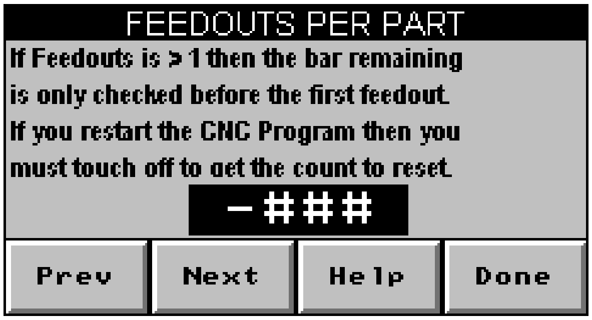
FEEDOUTS PER PART

If Feedouts is > 1 then the bar remaining
is only checked before the first feedout.
If you restart the CNC Program then you
must touch off to get the count to reset.

-###

Feed Outs Per Part: Enter the number of times the material is advanced during the machining of one part. This parameter allows the end of bar signal to be sent only before the first feed out when more than one feed out is called for. This prevents an end of bar signal being generated in the middle of a multiple feed out part and causing the bar to change before that part is completed.

In the event that the lathe part program is interrupted and restarted the pusher must touch-off the material to recalculate the remaining bar stock and reset the count.

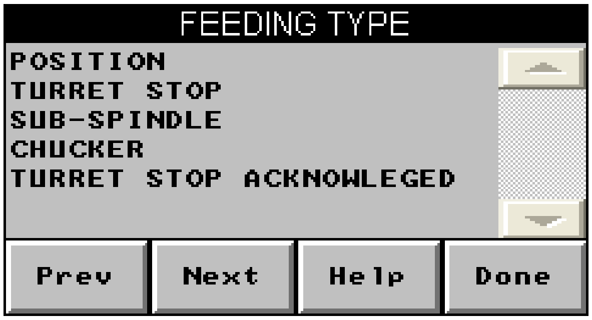
FEEDING TYPE

POSITION
TURRET STOP
SUB-SPINDLE
CHUCKER
TURRET STOP ACKNOWLEGED

Feeding Type: Selects between modes of feeding material in automatic.

Turret Stop: The bar feeder begins to push when the lathe collet opens and stops pushing after it presses against the stop. The bar feeder will use feed-out lengths 1 through 3 if set.

Position: The bar feeder pushes the length set in the parameter Part Length 1. The bar feeder will use the feed-out lengths 1 through 3 if set.

Sub-spindle: The bar feeder will touch off the back end of the bar stock to measure the length of the material and then return to the home position. It will then monitor the open collet signal and deduct the feed length from the length of the bar stock as measured during the touch off. When the remaining length of material is less than the part length setting the end of bar signal is sent to the lathe.

Chucker Mode: This setting allows the lathe to run without the bar feeder. When chosen the bar feeder sends an auto mode signal to the lathe while remaining in the manual mode.

Turret Stop Acknowledged: Works the same as the Turret Stop mode except that the pusher keeps pushing until the lathe collet closes.

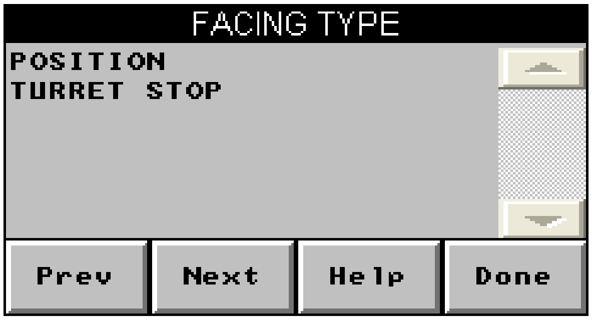

Facing Type: Selects between modes of bringing a new bar to facing position and restarting the lathe at the end of a bar change. Choices are Position and Turret Stop.

Position: - the bar feeder advances the bar to the position set by parameter Facing Length and stops. The cycle start signal is sent to the lathe when the Facing Length position is reached.

Turret Stop: - the bar feeder advances the bar to the position in Facing Length, then keeps pushing until the lathe collet closes. The cycle start signal is sent to the lathe when the Facing Length position is reached.

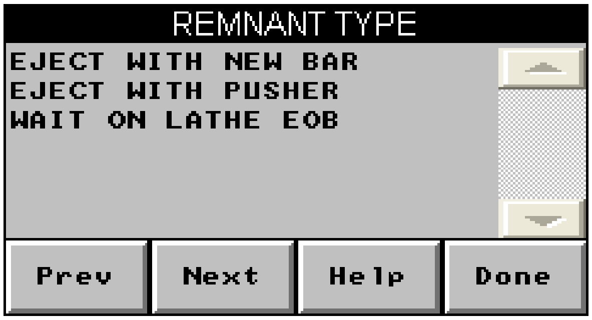

Remnant Type Selects between modes of remnant disposal. Choices are Extraction, Ejection and Return & Wait.

Extraction: At the last available part from a bar the bar pusher remains at the pullback distance until the bar change is commanded by the lathe. The pusher then retracts to the home position in preparation for a new bar to be loaded. The remnant is pushed out of the chuck with the new bar as it feeds to the facing position.

Eject with new bar: After feeding the last available part length into the lathe the pusher retracts to the home position when the collet closes. When the lathe sends the bar change command the new bar is loaded into the lathe with the remnant being ejected by the new bar as it feeds through the spindle to the facing position.

Continued next page

Eject with pusher: After feeding the last available part length into the lathe the pusher retracts to the home position when the collet closes. When the lathe sends the bar change command the bar pusher moves forward to eject the remnant from the lathe collet, then returns to the home position to continue the bar change cycle.

Return & Wait: This mode works much the same as the Ejection mode except that when the lathe collet closes after feeding the last part from the bar stock, the pusher retracts to home position. The V-channel lifts and takes a new bar from the magazine. The bar feeder waits for the part to be finished and a signal to begin the bar change to be sent from the lathe. The remnant is ejected through the lathe collet by the new bar as is feeds to the facing position. This mode is the preferred selection for this parameter.

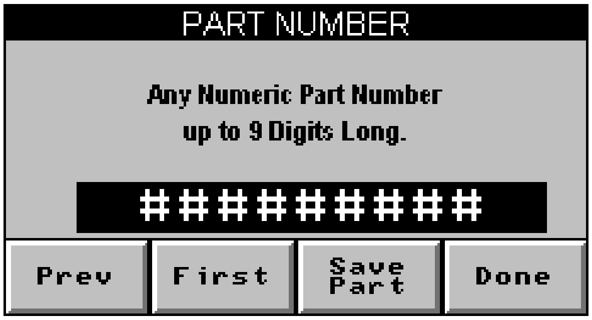
PART NUMBER

Any Numeric Part Number
up to 9 Digits Long.

#########

Part Number: Allows the user to attach a unique number to the just created bar feeder program so it may be easily retrieved to be used again.

8. Maintenance

Hazard Warning

Before doing bar feeder maintenance turn off the main power switch on the cabinet door. For consistent operation of the bar feeder maintenance checks should be performed regularly. The area around the bar feeder should be kept clean to avoid safety issues.

8.1 Periodic Maintenance

The items on the chart below should be performed at the intervals as listed.

Component	Action	Frequency				
		Hours			Regular	Period
		200	1250	2500		
Fasteners	Check tightness					Yearly
V-Channel	Check wear and clean		●			
Friction points	Lubrication	●				
Drive belt	Tension		●			
Bar feed interior	Clean chips		●		Or as needed	

8.2 Drive belt tension adjustment

The drive belt adjustment on the Rebel 102SE is made by moving the front drive belt pulley by means of adjusting screws at the front of the bar feeder. Loosen the two bolts, one on each side of the pulley shaft. Turn the tightening screws clockwise to draw the pulley shaft forward and tighten the belt. Jog the pusher forward and backward several times and observe the tracking of the belt on the front and rear pulleys. If the belt pulls to one side loosen the opposite side tensioning screw. When the belt is tracking properly retighten the two bolts on the pulley shaft, alternating between the two in small increments until snug.

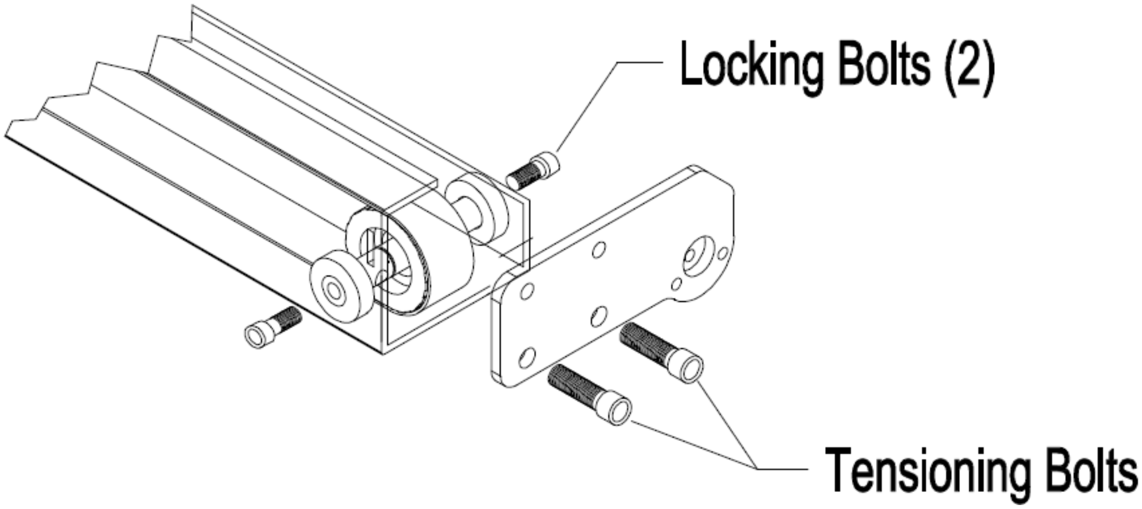

8.3 Lubrication

Friction points on the bar feeder should be lubricated monthly with a general purpose grease. Points to be lubricated are the linear way of the bar pusher carriage (grease fitting), pivot points of the magazine, the cam and follower bearing of the V-channel lifting assembly (located inside the electrical cabinet) and the bar pusher selector cams. A light film of oil should be maintained on the bar pusher to lubricate the bar pusher support bushing.

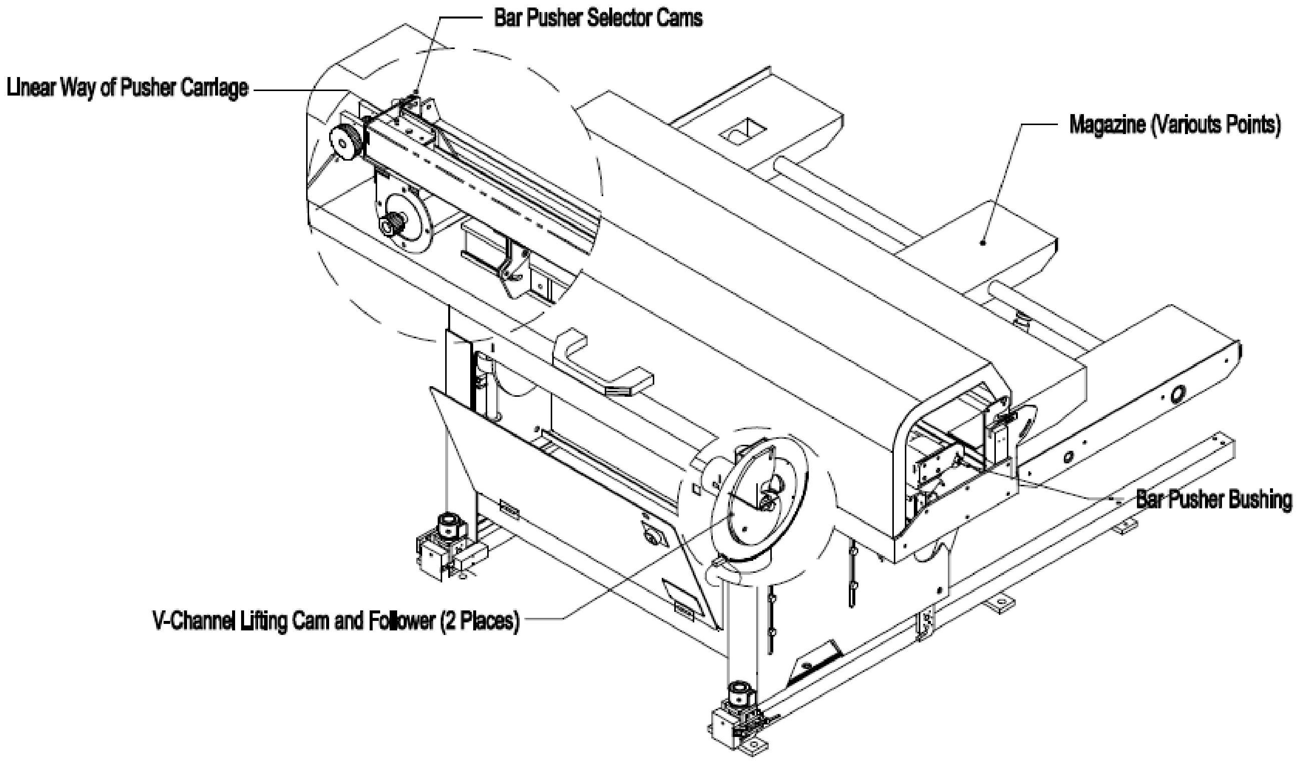
Bar Pusher Selector Cams
Linear Way of Pusher Carriage
Magazine (Varioults Points)
Bar Pusher Bushing
V-Channel Lifting Cam and Follower (2 Places)

8.4 Maintenance Screens

To access the maintenance screens press the “Maint Screen” button from the start page.

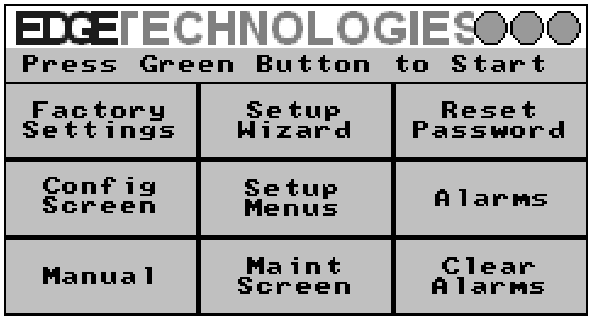
EDGE TECHNOLOGIES
Press Green Button to Start
Factory Settings
Setup Wizard
Reset Password
Config Screen
Setup Menus
Alarms
Manual
Maint Screen
Clear Alarms

This will bring up the maintenance menu screen.

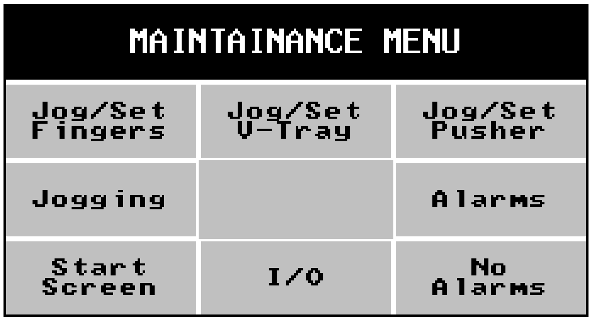
MAINTAINANCE MENU
Jog/Set Fingers
Jog/Set V-Tray
Jog/Set Pusher
Jogging
Alarms
Start Screen
I/O
No Alarms

From the Maintenance Menu screen the loading fingers, V-tray and bar pusher functions can be set.

Fingers

The function of the fingers are to hold back the material on the magazine so that only one bar is picked up at a time for loading. The fingers automatically adjust to the correct position when the bar diameter and material profile are set in the part program.

Jog / Set Fingers: Pressing this button calls up the screen to allow adjustment and manual jogging of the fingers

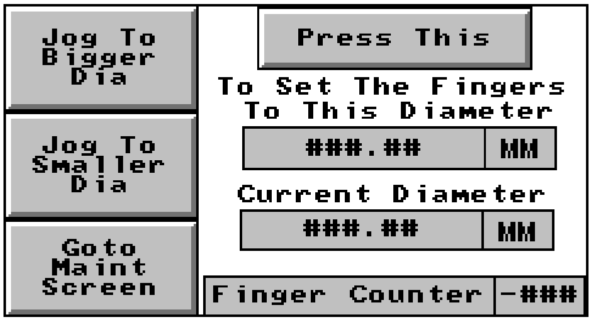
Jog To Bigger Dia
Jog To Smaller Dia
Goto Maint Screen
Press This
To Set The Fingers To This Diameter
###.## MM
Current Diameter
###.## MM
Finger Counter -###

If the fingers do not correctly separate the bars on the magazine the adjustment can be changed from this screen. Use the “Jog to Bigger Diameter” or “Jog to Smaller Diameter” buttons to position the fingers so only one bar will be lifted into the V-tray.

continued next page

Touch the box under “To Set The Fingers To This Diameter” button. Input the bar diameter desired. Press the “Press This” button to store the actual position of the fingers to match the bar diameter in the part program.

Press the “Go to Maint Screen” button to exit the Jog/Set Fingers page.

V-Tray

Press the Jog/Set V-Tray button to view the V-Tray setting screen.
The V-Tray raises the material to be loaded to the centerline of the lathe spindle so the pre-feed pusher can move the bar into the spindle. The V-Tray adjusts automatically to the proper height according to the setting in the Bar Diameter box on parameter page 3.

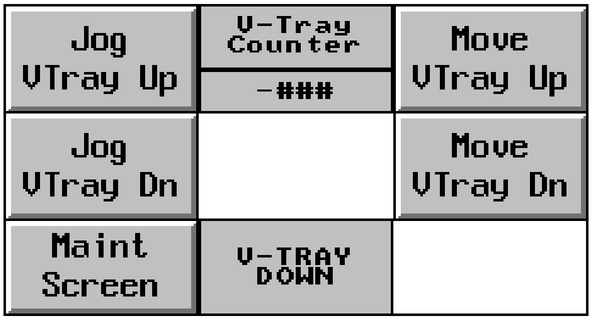

Jog VTray Up / Jog VTray Down: These buttons allow the user to manually raise and lower the V-Tray to any position within the limits of the travel as defined by the bar diameter on parameter page 3.
Move VTray Up / Move VTray Down: Buttons cause the V Tray to move to the upper and lower limits of travel as defined by the bar diameter entered on parameter page 3.
V-Tray Counter: Shows the number of pulses from the S03 switch for V-Tray motion.
Bottom center display: Shows the status of the V-Tray (Up, Down or Middle).
Maint Screen: Press to return to the Maintenance Menu Screen.

Jog / Set Pusher

Press the Jog / Set Pusher button to view the screen for controlling the bar pusher. The Rebel 102 uses a two-pusher system. The short or pre-feed pusher moves the material from the V-Tray into the lathe spindle. The long pusher advances the material through the spindle as the parts are made.

continued next page

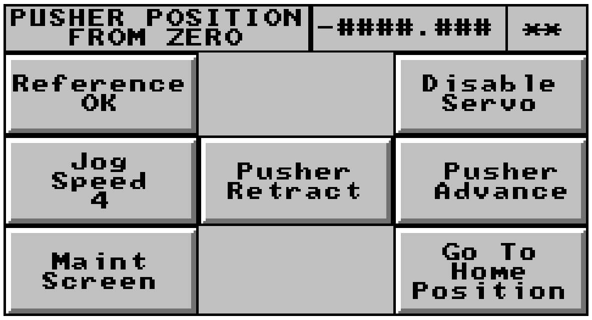

Pusher position from zero: This box on the screen has two possible messages. It can display the bar feeder pusher position from the zero point and it can display the number of parts remaining on the bar to be run. Pushing the upper left button will toggle between the two screens.

Reference OK: This button has two possible messages, Reference OK and Reference Lost. Pressing the button will cause the bar feeder to reset the reference itself with either label present. During the reference procedure the button will say Reference Lost.

Disable Servo: This button can display either Disable Servo or Servo Disabled. When the message is Disable Servo, pressing the button will turn off the servo drive and allow the bar pusher to be moved by hand. Pressing the button when it says Servo Disabled will re-engage the servo drive.

Jog Speed: Pressing this button will cycle through the 5 choices for the jogging speed of the bar pusher. Settings range from 1 (extremely slow) to 5 (rapid).

Pusher Retract: Allows the user to jog the bar pusher backwards toward the home position.

Pusher Advance: Allows the user to jog the bar pusher forward toward the lathe.

Maint Screen: Press to exit the Set/Jog Pusher screen and return to the Maintenance screen.

Go To Home Position: Pressing this button sends the bar pusher to the zero (home) position. Please note that the Go To Home button does NOT reset the home position.

Jogging

Press the Jogging button to display the screen below. The screen gives manual control to the main movement groups.

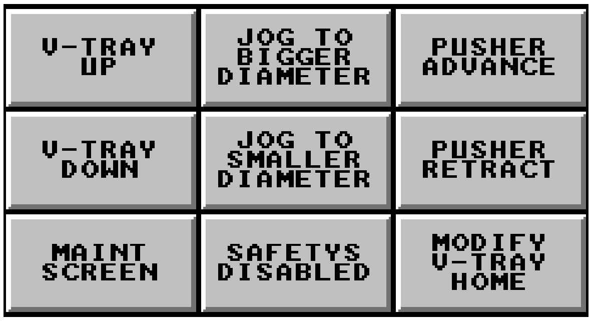

Safeties Disabled: **CAUTION!** Activating the Safeties Disabled button on this page defeats the travel limits and required conditions normally in place to protect the machine. The possibility exists of binding up the V-tray motor at the bottom of the travel or overrunning the lifting cams at the top of the travel. When the safeties are disabled he finger motor can run past it's limits and bind up. Moving the V-tray with the pusher not at home can cause the bar pusher to break. Please reserve the use of the Safeties Disabled function for qualified personnel.

V-Tray Up / Down: These are momentary on buttons that allow the V-Tray to be raised or lowered within the safety limits of the bar feeder.

Jog To Bigger / Smaller Diameter: The buttons allow the bar separator fingers to be manually adjusted. This is helpful in the event of over travelling the screw for the fingers.

Pusher Advance / Retract: Allows the short pusher or the bar pusher to be moved forward or backward.

Modify V-Tray Home: When the Safeties Disabled button is pushed this button label changes to Make Current Position V-Tray Home. Pushing the button in this state will reset the current position as the home or down position of the V-Tray.

Alarms: Press the Alarms button to view current alarm messages. Alarms may be cancelled by pressing the Clear Alarm button. If no alarms are present the button for Clear Alarm will change to No Alarms. Please see section 11 for a list of possible faults.

Maint Screen: Press to return to the Maintenance screen.

User Parameter menu screens used below are from the Setup Menu screens which are a condensed version of the Setup Wizard menu screens. The information is the same for the two screen layouts.

It is important to understand basic screen functions and features. When selecting Esc Pg1 this will take you to the manual page.

To save any values changed select Keep Edits

To change the value of a parameter select the number or value and an additional keypad will appear. If the options are values these will toggle through the choices each time the screen is pressed.

Parameter Page 1

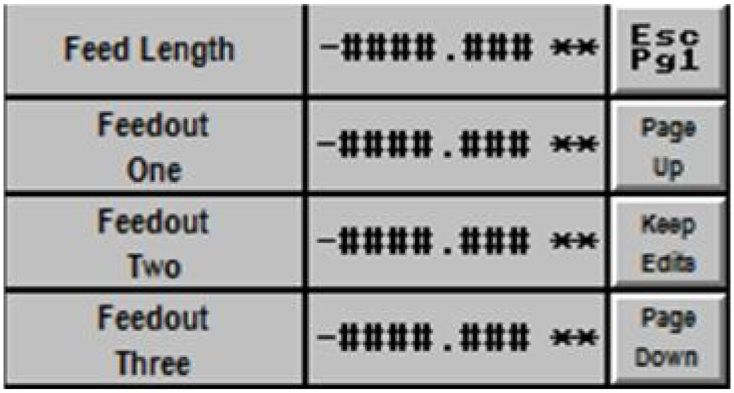

Feed Length	-####.### **	Esc Pg1
Feedout One	-####.### **	Page Up
Feedout Two	-####.### **	Keep Edits
Feedout Three	-####.### **	Page Down

FEED LENGTH 1: Total length of part being machined. Calculate the proper setting by adding the Length of part + Width of cut-off tool + facing stock.

Feed-out 1-1: The distance the material will feed out during first feed of a part on fixed headstock lathe. Distance headstock will pull material during pull of part on sliding headstock lathe

Feed-out 1-2: Used when making multiple feed-outs per part. Feed-out 1-2 is the second of 3 possible feed-outs per part. Parameter is disabled if set to zero. Press the Feed-out 1-2 dimension button to access page 1.2 and additional options.

Feed-out 1-3: Used when making multiple feed-outs per part. Feed-out 1-3 is the third of 3 possible feed-outs per part. Parameter is disabled if set to zero. Press the Feed-out 1-3 dimension button to access page 1.3 and additional options.

Parameter Page 3

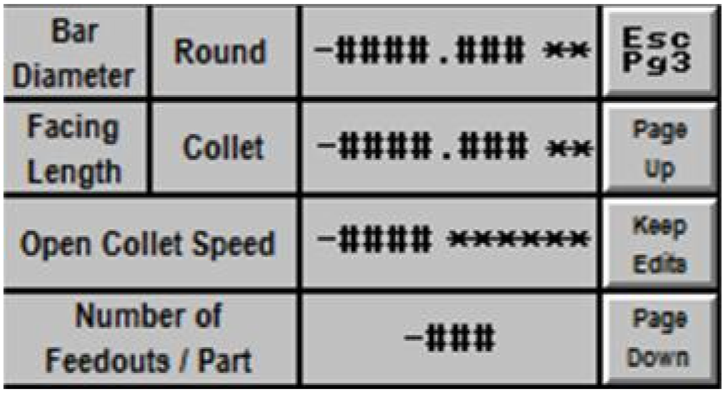

Bar Diameter	Round	-####.### **	Esc Pg3
Facing Length	Collet	-####.### **	Page Up
Open Collet Speed		-#### ******	Keep Edits
Number of Feedouts / Part		-###	Page Down

Bar Diameter: Diameter of the material to be used. The control uses this information to set default values for the program.

- Round- Measure outside diameter
- Hex- Measure across flats
- Square measure across flats
- Other – No pusher return on empty

Bar Profile: Allows selection between choices round, hex and square. The parameter is used to adjust the height of the V-channel for the centerline of the different material shapes in the channel.

Facing Length: Distance past face of collet or check material will be loaded to during facing (bar change) or bar on sequence.

Collet / Chuck: There are three options for the facing length setting. Pressing the Collet/Chuck button toggles between the three options. This feature allows for three different facing positions for different chucking systems. Select between Sliding, Collet, and chuck.

Open Collet Speed: Sets the speed of the bar pusher advance when in automatic with the lathe collet open.

Number feed outs/part: The number of feed outs per part.

Parameter Page 4

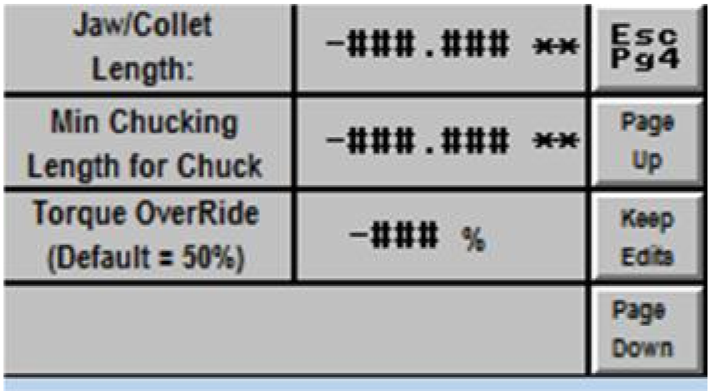

Jaw/Collet Length: -###.### **

Min Chucking Length for Chuck -###.### **

Torque OverRide (Default = 50%) -### %

Jaw/Collet length: The actual length of the collet or jaw depth. Required to determine the amount of material needed for gripping to determine number of parts remaining from bar.

Min Chucking length for chuck: The actual chuck length. Required to determine the amount of material needed for gripping to determine number of parts remaining from bar.

Torque override: Sets the clutch force for the bar pusher when in automatic with the lathe collet open. The setting is expressed as a percentage of the default setting chosen according to the bar diameter parameter. Adjustable range is -50% to +250%

Parameter Page 5

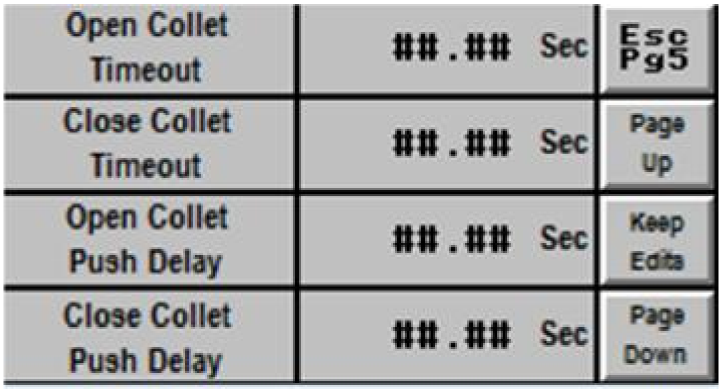

Open Collet Timeout	##.## Sec
Close Collet Timeout	##.## Sec
Open Collet Push Delay	##.## Sec
Close Collet Push Delay	##.## Sec

Open Collet Timeout: Time between when lathe collet opens and then closes when bar feed is in auto if time is reached then alarm is generated.

Close Collet Timeout: Time between when lathe collet closes and then opens when bar feed is in auto if time is reached then alarm is generated.

Open Collet Push Delay: After lathe collet open signal is received, pusher will delay pusher movement for set time.

Close Collet Push Delay: After lathe collet close signal is received, pusher will continue pusher movement for set time then stop.

Parameter Page 6

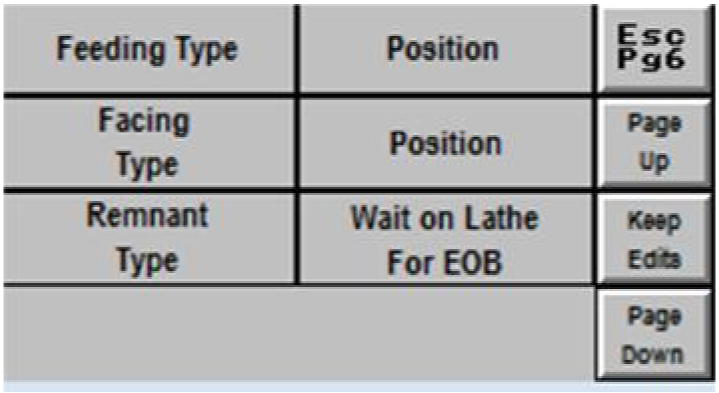

Feeding Type	Position
Facing Type	Position
Remnant Type	Wait on Lathe For EOB

Feeding Type: Selects between modes of feeding material in automatic. Choices are

- Position-- In Position mode the bar feeder pushes the length set in the parameter Part Length 1. In both modes the bar feeder will use the feed-out lengths 1 through 3 if they are set.
- Turret Stop Ack'd -- Feed to a turret stop, the bar feeder begins to push when the lathe collet opens and stops pushing when the lathe collet closes.
- Sub spindle: bar feeder will touch off the back end of the bar stock to measure the length of the material and then return to the home position. It will then monitor the open collet signal and deduct the feed length from the length of the bar stock as measured during touch off. When the length of material is less than the part length setting, the end of bar signal is sent to the lathe.
- Chucker Mode- Places the bar feeder into a suspend mode when the lathe does not require a bar feeder for operation. Bar feeder will send signals to the lathe to comply with all safety and signal requirements. Bar feeder and Lathe Emergency stops are still functional.
- Turret stop— do not use, only used for special applications during initial setup.

Facing Type: Selects between modes of bringing a new bar to facing position and restarting the lathe at the end of a bar change. Choices are Position and Turret Stop.

- In Position mode the bar feeder advances the bar to the position set by parameter Facing Length and stops. Distance measured by bar feed, face of collet + facing distance
- In Turret Stop mode the bar feeder advances the bar to the position in Facing Length, then keeps pushing until the lathe collet closes. Distance measured by barfeed, face of collet + facing distance then torque out at turret stop.

In both modes the cycle start signal is sent to the lathe when the Facing Length position is reached.

Remnant Type: Selects between modes of remnant disposal. Choices are Extraction, Ejection and Return & Wait.

- Extraction: Pull back remnant
- Ejection: After feeding the last available part length into the lathe the pusher retracts to the home position when the collet closes. When the lathe sends the bar change command the bar pusher moves forward to eject the remnant from the lathe collet, then returns to the home position to continue the bar change cycle.
- Return & Wait This mode works much the same as the Ejection mode except that when the lathe collet closes after feeding the last part from the bar stock, the pusher retracts to home position. The V-channel raises up and takes a new bar from the magazine. The bar feeder waits for the part to be finished and a signal to begin the bar change to be sent from the lathe. The remnant is ejected through the lathe collet by the new bar as is feeds to the facing position. This mode is the preferred selection for this parameter.

Parameter Page 7

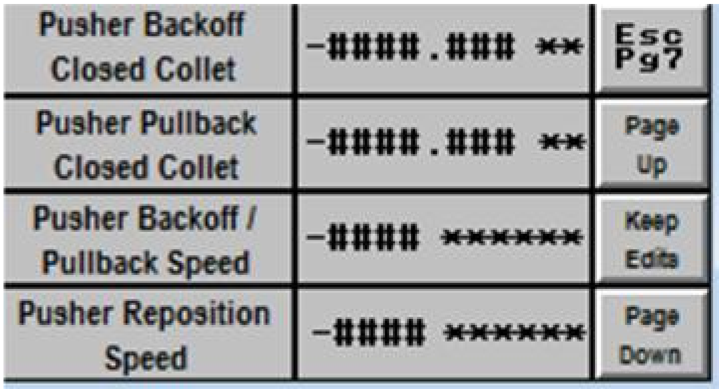

Pusher Backoff Closed Collet	-####.### **
Pusher Pullback Closed Collet	-####.### **
Pusher Backoff / Pullback Speed	-#### ******
Pusher Reposition Speed	-#### ******

Pusher Back Off Closed Collet: Sets the distance the bar pusher moves away from the bar stock toward the bar feeder’s home position when the lathe collet open signal turns off and the time setting in the closed collet delay parameter (if other than zero) elapses.

Pusher Pull Back Closed Collet: This parameter works with the pusher back off parameter. The pullback closed collet setting is a distance from the bar feeder zero point. As the bar advances the material into the lathe the bar pusher moves back the distance in the pusher back off parameter until the point of pull back equals the pusher pull back closed collet parameter setting. Then when the lathe collet closes the bar pusher moves back to the pull back position each time the collet closes.

Pusher Back off / Pull back Speed: Sets the backward speed of the bar pusher as it pulls away from the bar stock after the closing off the lathe collet.

Pusher Reposition Speed: Sets the forward speed of the bar pusher to cover the distance from the point of pull back after the collet closes to the back of the bar stock.

Parameter Page 8

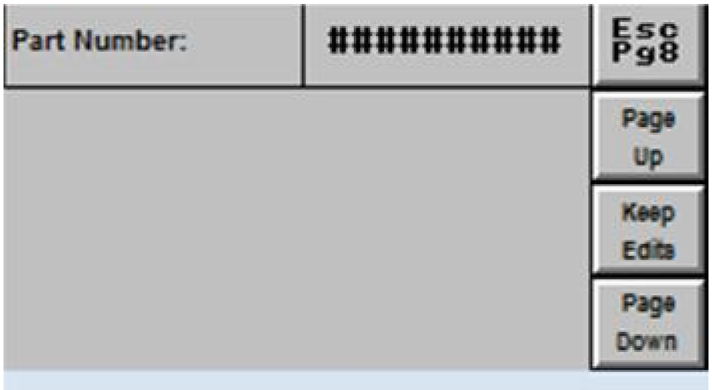
Part Number:
###########
Esc Pg8
Page Up
Keep Edits
Page Down

Change Program Number: Allows change of the present part program number. Will not allow duplicating an existing program number.

Parameter Page 11

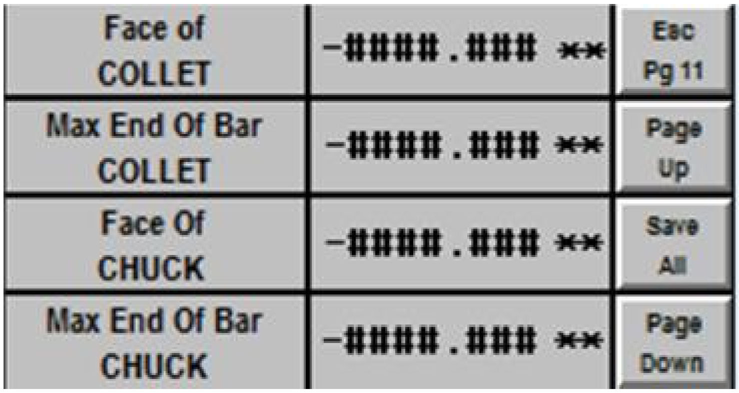

Face of COLLET	-####.### **	Esc Pg 11
Max End Of Bar COLLET	-####.### **	Page Up
Face Of CHUCK	-####.### **	Save All
Max End Of Bar CHUCK	-####.### **	Page Down

Face of Collet: This parameter controls the stopping position of the front of the new material being loaded into the lathe during a bar change. The distance is usually the measurement from the facing flag to the face of the collet chuck. During the pre-feed step the front of the new bar stock pushes the facing flag down. This releases the S4 proximity switch and starts measuring the cycle start (M-code finished) signal is given to the lathe to end the bar change cycle. This parameter is a master setting. It can be offset in the plus direction by the parameter “facing length collet” on parameter page 3 to move the stopping point farther into the lathe. The maximum feeding position is the distance minus the chucking length the part parameters. If maximum end of bar is reached first, then it is used instead.

Max. End of Bar Collet: Sets the forward limit of the bar pusher stroke when using a collet chuck. The position is typically set with the tip of the bar pusher even with the rear of the gripping surface of the collet pads. The control calculates the end of bar signal position by subtracting the distance set in the Part Length parameter from this parameter. Once the encoder shows the bar pusher position equal to or greater than the result of the calculation an end of bar signal is sent to the lathe. This is the maximum position the pusher will go to when feeding a bar. It overrides the face of collet minus the chucking length.

Face of chuck: This parameter is the same as the Face of Collet parameter except that the dimension is measured with the tip of the bar pusher even with the back of the gripping portion of the chuck jaws.

Max. End of Bar Chuck: This parameter is the same as the Max End of Bar Collet parameter except that the dimension is measured with the tip of the bar pusher even with the back of the gripping portion of the chuck jaws.

Parameter Page 12

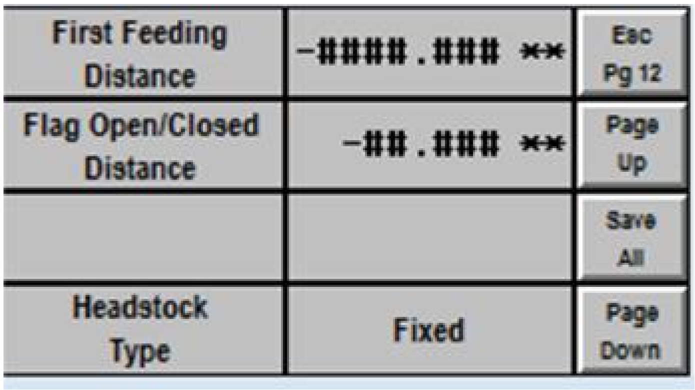

First Feeding Distance	-####.### **
Flag Open/Closed Distance	-##.### **
Headstock Type	Fixed

First Feeding Distance: This parameter controls the forward stopping point of the pre-feed pusher from the home. The position must allow the pre-feed pusher to place the rear of the bar stock ahead of the bar pusher and not after the grippers.

Flag open/closed distance: This parameter is to calibrate the amount of movement that is needed before it recognizes that the flag has been triggered.

Headstock Type: Set this parameter for the type of lathe. The choices are Fixed, Sliding and Sliding Bushing.

Parameter Page 13

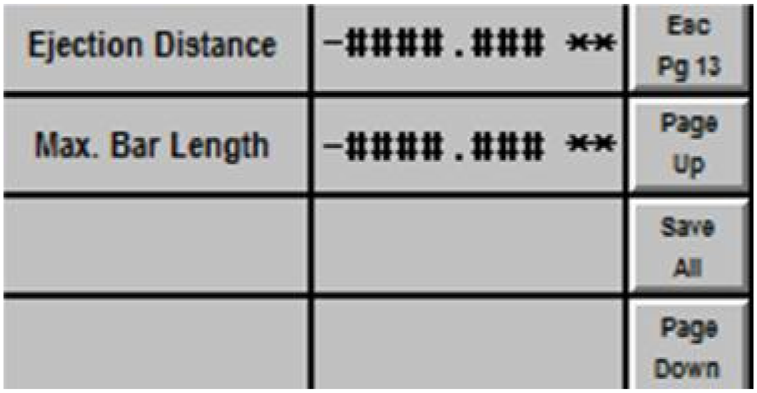

Ejection Distance	-####.### **	Esc Pg 13
Max. Bar Length	-####.### **	Page Up
		Save All
		Page Down

Ejection Distance: Sets a distance for the bar pusher to move forward past the Maximum End of Bar setting to eject the remnant into the lathe when the Remnant Handling parameter on parameter page 5 is set to Ejection.

Max. Bar Length: Sets the maximum allowable length of bar stock to be loaded into the lathe. The length must be set so that no material extends past the back of the actuator on the lathe when a new bar is loaded. The parameter is usually set to the measurement of the back of the spindle or actuator to the facing position.

Parameter Page 14

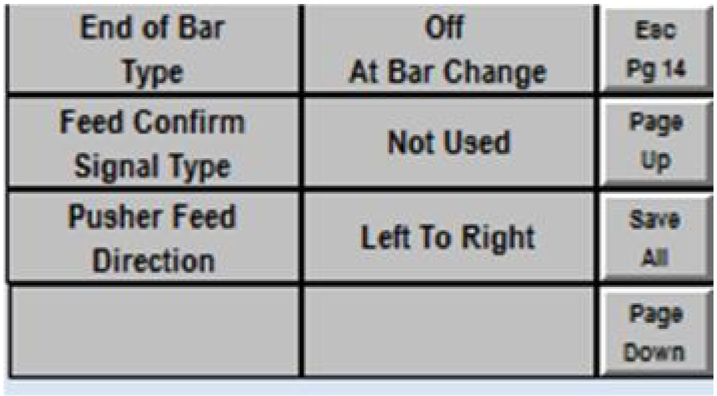

End of Bar Type	Off At Bar Change
Feed Confirm Signal Type	Not Used
Pusher Feed Direction	Left To Right

End of Bar Type: Selects between different modes of generating the end of bar signal. Choices are:

- Off at Bar Change--Signal resets when the command “Bar Change” is received from the lathe.
- Pulse--Signal is a pulse for a duration set in the parameter End Of Bar Pulse on page 16.
- Latch--Signal comes on at the end of bar position and turns off when facing position is reached.
- Double Pulse--Signal pulses when the end of bar position is reached and again when the facing position is reached. Signal pulses for the duration set in parameter End Of Bar Pulse on page 16.

Feed Confirmation Signal Type: Selects between different modes of generating a signal for confirmation of bar feeding. Choices are:

- Not Used--No signal is output.
- Finished Feeding--Signal is sent when the pusher finishes moving the distance set in the feed length.
- Start Feeding--Signal is sent when the pusher begins to move.
- During Feeding--Signal is sent when the feed-out begins and stops when the feed length distance is completed

Pusher Feed Direction: Allows direction of operation of the jog buttons on the HMI and Remote Pendant to be reversed to accommodate different lathe configurations. Choices are Left to Right and Right to Left.

Parameter Page 15

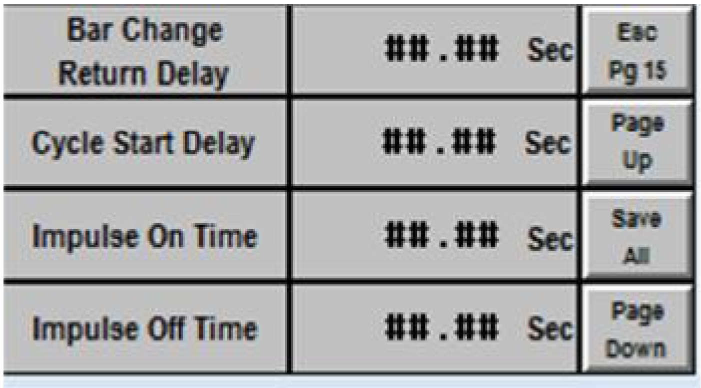
Bar Change Return Delay ##.## Sec
Cycle Start Delay ##.## Sec
Impulse On Time ##.## Sec
Impulse Off Time ##.## Sec

Bar Change Return Delay: Sets a delay in seconds for the pusher to begin the return to home position after the bar change command is received.

Cycle Start Delay: Sets a delay in sending the signal to the lathe confirming that the bar change is complete.

Impulse on Time: Sets a length of time for the bar feeder to send a signal to the lathe to rotate the spindle during bar change. This parameter works with Impulse Off Time.

Impulse off Time: Sets a length of time for the bar feeder to turn off the Impulse On Timer during the bar change. The combination of these two parameters causes the lathe spindle rotation to pulse as an aid to inserting the new bar through the collet.

Parameter Page 16

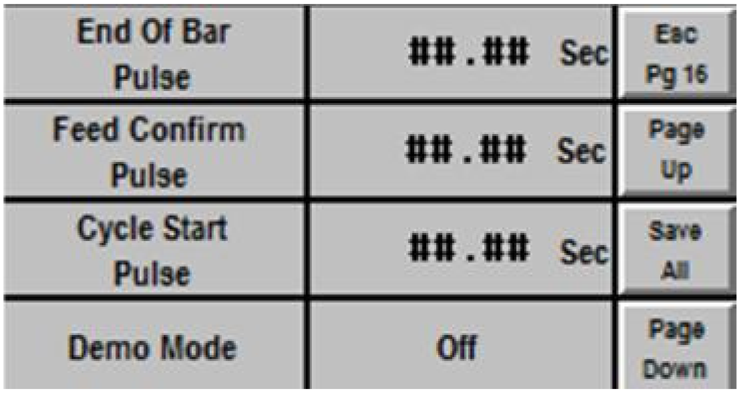

End Of Bar Pulse	##.## Sec
Feed Confirm Pulse	##.## Sec
Cycle Start Pulse	##.## Sec
Demo Mode	Off

End Of Bar Pulse: Sets the length of time in seconds for the signal to remain on when the end of bar signal is set to pulse.

Feed Confirm Pulse: Sets the length of time in seconds for the signal to remain on when the feed confirmation signal is set to pulse.

Cycle Start Pulse: Sets the length of time in seconds for the cycle start signal to remain on.

Demo Mode: Activates or deactivates the demonstration program of the bar feeder.

Parameter Page 17

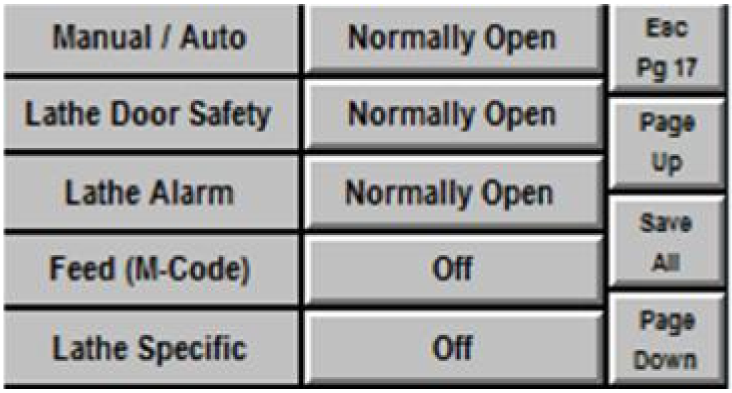

Manual / Auto	Normally Open
Lathe Door Safety	Normally Open
Lathe Alarm	Normally Open
Feed (M-Code)	Off
Lathe Specific	Off

Manual / Auto: Allows the bar feeder to accept the Manual / Automatic signal from the lathe as either a normally open or normally closed signal.

Lathe Door Safety: Allows the bar feeder to accept the Lathe Door Open signal from the lathe as either a normally open or normally closed signal.

Lathe Alarm: Allows the bar feeder to accept the Lathe Alarm signal from the lathe as either a normally open or normally closed signal.

Feed (M-Code): Allows the bar feeder to accept the Feed Stop signal from the lathe as either a normally open or normally closed signal.

Lathe Specific: Special setting for specific lathes that use other than standard interfaces and special software.

Parameter Page 20

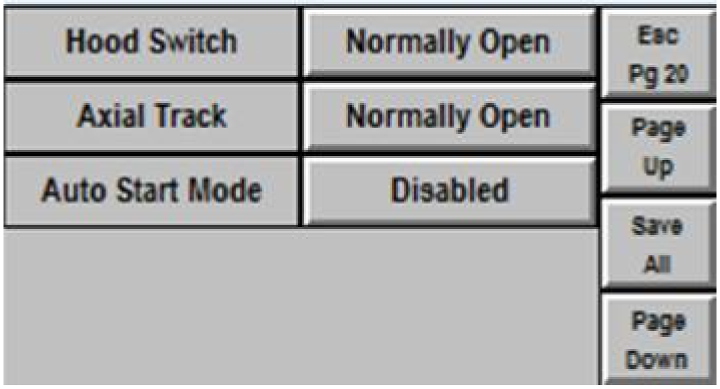
Hood Switch: Normally Open
Axial Track: Normally Open
Auto Start Mode: Disabled

Hood Switch: Changes the hood switch safety alarm to either trigger when the hood switch is normally open or normally closed.

Axial track: Changes the axial track safety alarm to either trigger when the axial track switch is Normally Open or normally closed.

Auto start mode: This setting allows the bar feeder to automatically switch into automatic mode when the lathe goes into automatic mode, this will only work if the lathe is able to send an automatic mode signal to the bar feeder.

Parameter Page 22

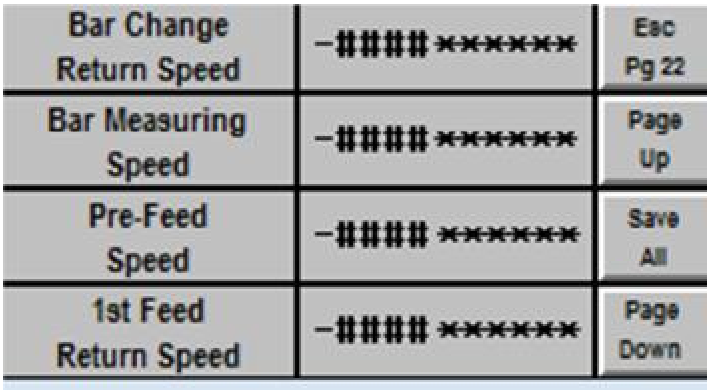

Bar Change Return Speed	–#### xxxxxx	Esc Pg 22
Bar Measuring Speed	–#### xxxxxx	Page Up
Pre-Feed Speed	–#### xxxxxx	Save All
1st Feed Return Speed	–#### xxxxxx	Page Down

Bar change return speed: Speed for the bar pusher as it retracts to the home position at the beginning of a bar change.

Bar measuring speed: Speed at which the pre-feed pusher moves at until the bar hits the measuring flag during pre-feed.

Pre-feed speed: Speed at which the pre-feed pusher moves at after the bar hits the measuring flag during pre-feed.

1st feed return speed: Speed of the pre-feed pusher as it retracts to the home position after completing the 1st feed cycle.

Parameter Page 22

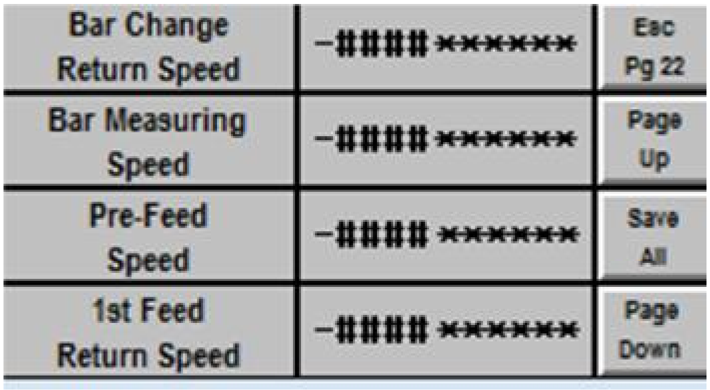

Bar Change Return Speed	–#### ******	Esc Pg 22
Bar Measuring Speed	–#### ******	Page Up
Pre-Feed Speed	–#### ******	Save All
1st Feed Return Speed	–#### ******	Page Down

Bar Change Return Speed: Speed of the bar pusher as it retracts to the home position at the beginning of a bar change.

Bar measuring speed: Speed at which the pre-feed pusher moves at until the bar hits the measurement flag during pre-feed. Also known as1st Feed Speed 1

Pre-Feed speed: Speed at which the pre-feed pusher moves at until the bar hits the measurement flag during pre-feed. Also known as1st Feed Speed 2

1st Feed Return Speed: Speed of the pre-feed pusher as it retracts to the home position after completing the 1st feed cycle.

Parameter Page 23

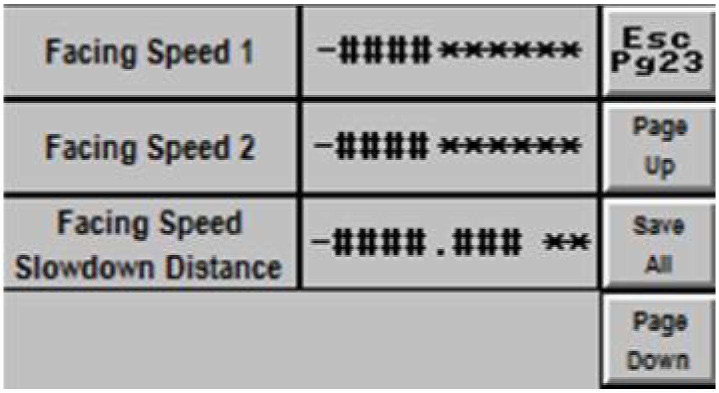

Facing Speed 1	-#### ******
Facing Speed 2	-#### ******
Facing Speed Slowdown Distance	-####.### **

Facing Speed 1: Forward speed of the bar pusher during the facing operation until it reaches the Facing Speed Slowdown Distance.

Facing Speed 2: Forward speed of the bar pusher during the distance specified in the Facing Speed Slowdown Distance Parameter during facing. Speed pusher moves at during pecking cycle.

Facing Speed Slowdown Distance: Distance before pusher reaches facing position when pusher slows down to facing speed 2. This distance is measured from the facing position back toward the bar feeder.

Parameter Screen 24

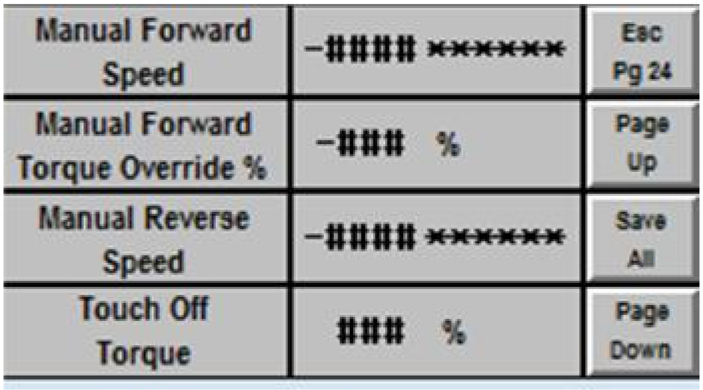

Manual Forward Speed -#### ******

Manual Forward Torque Override % -### %

Manual Reverse Speed -#### ******

Touch Off Torque ### %

Manual Forward Speed: Forward speed of the pusher and pre-feed pusher when commanded to move via the jog buttons or through the input for Manual Forward.

Manual Forward Torque Override %: Sets the amount of force developed by the clutch when moving the bar pusher forward in manual mode via the jog buttons or through the input for Manual Forward in the bar feeder to lathe interface (if used). Range of setting is ± 50%.

Manual Reverse Speed: Speed of the pusher and pre-feed pusher in reverse when commanded to move via the jog buttons or through the input for Manual Reverse in the bar feeder to lathe interface (if used).

Touch off torque: Speed pusher moves at during manual reverse.

Parameter Page 26

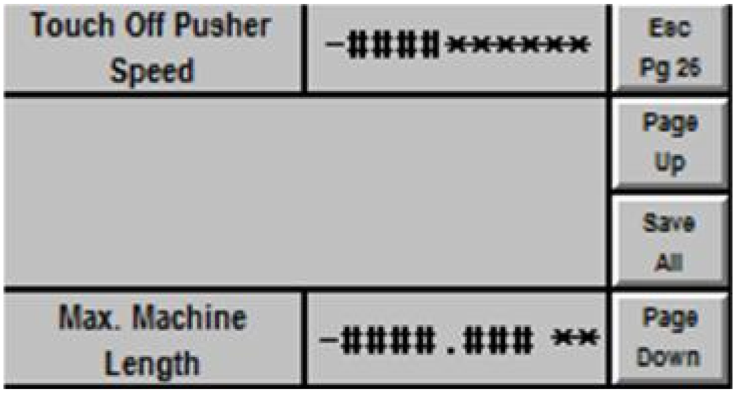

Touch Off Pusher Speed -####xxxxxx

Max. Machine Length -####.### xx

Esc
Pg 26
Page
Up
Save
All
Page
Down

Touch off pusher Speed: Speed pusher moves during the measurement of the bar in the spindle

Max. Machine Length: Maximum pusher stroke of bar feed. Distance from pusher home to facing flag.

Parameter Page 30

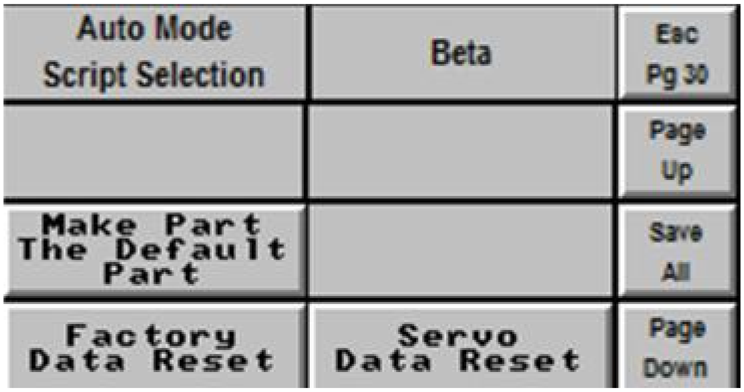

Auto Mode Script Selection: Beta

Esc Pg 30
Page Up
Make Part The Default Part
Save All
Factory Data Reset
Servo Data Reset
Page Down

Auto Mode Script Selection: This option allows you to select the method that the bar feeder runs. It changes how the internal code is executed. Available script selections,

- The default parameter is Bar loader.
- Shaft load for specific applications
- Beta – testing purpose
- Beta single step – Testing purpose

Make Part the default Part: This option allows you to set a part program to the default program and you can call it by pressing get default in the program menu.

Factory Data Reset: This option resets the factory settings to how they were just after installation.

Servo Data reset: This option resets the servo date back to its default settings.

Parameter Page 31 & 32

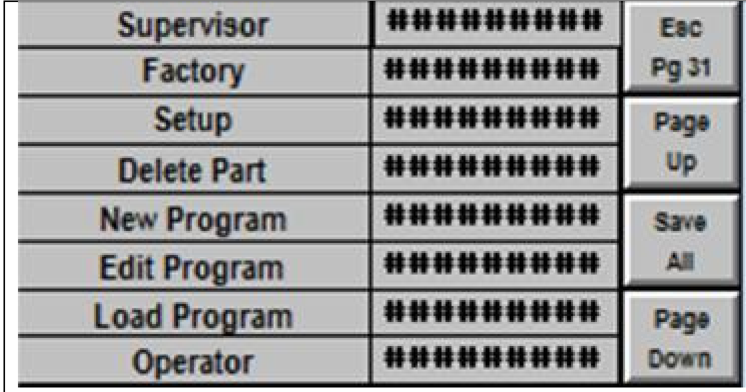

Supervisor ##########
Factory ##########
Setup ##########
Delete Part ##########
New Program ##########
Edit Program ##########
Load Program ##########
Operator ##########

need image

The password screens allow you to edit the passwords needed to access different settings. Only passwords that are equal to or below the level that you signed in with may be changed.

Supervisor: Can access all the above listed screens.

Factory: Can access most of the factory settings and all of the part parameters.

Setup: Can access very little of the factory settings and all of the part parameters.

Delete part: Full access to part menus, cannot access factory settings.

New Program: Can create, edit, and load part programs, but cannot delete them or access factory settings.

Edit Program: Can edit and load part programs, but cannot create or delete them or access factory settings.

Load program: Can load part programs , but cannot create, delete, or edit them or access factory settings.

Operator: Cannot access part or factory parameters, only has access to minimal function in order to run the machine.

Default Password: Factory set

Parameter Page 40

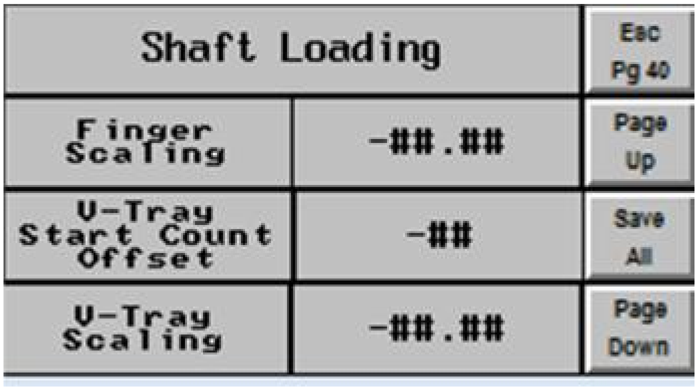

Shaft Loading

Finger Scaling	-##.##
V-Tray Start Count Offset	-##
V-Tray Scaling	-##.##

Note: From page 40 and on are reserved for Edge Technologies Service Technician and are not accessible normally.

The top key is to select the I/O version that is to be used for the bar feeder. Normal operation is “Rebel 102 wiring Version 2.

Finger Scaling: This parameter adjusts the amount of movement per count the fingers will move. This is in millimeters
V-Tray start count offset: This adjust the V-Tray offset in millimeters.

V-Tray scaling: This adjusts the amount of movement per count the V-Tray moves in millimeters.

Parameter Page 41

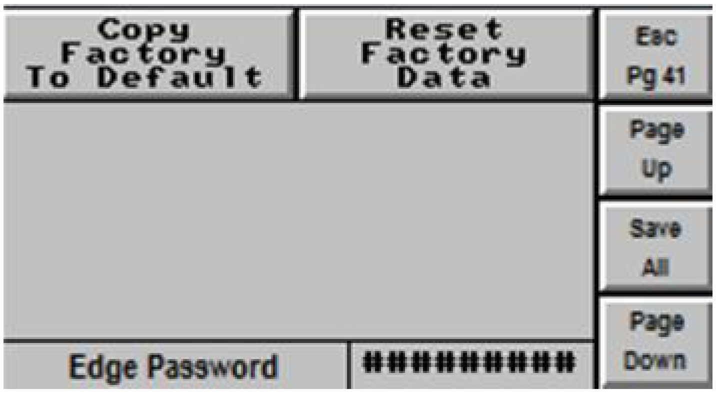
Copy Factory To Default
Reset Factory Data
Esc Pg 41
Page Up
Save All
Page Down
Edge Password
##########

Copy Factory to default: Change factory defaults to current settings.

Reset factory data: Initializing factory settings to Edge Installer Parameters (Complete reset)

Parameter Page 42

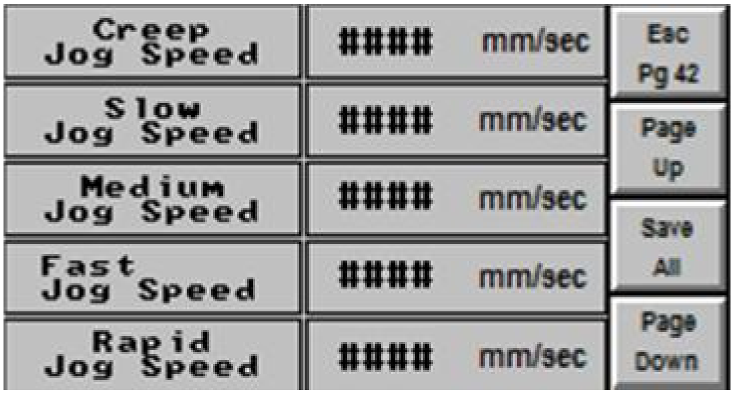
Creep Jog Speed
#### mm/sec
Esc Pg 42
Slow Jog Speed
#### mm/sec
Page Up
Medium Jog Speed
#### mm/sec
Save All
Fast Jog Speed
#### mm/sec
Rapid Jog Speed
#### mm/sec
Page Down

Creep jog speed: Speed pusher returns at during bar change.

Slow jog speed: Speed pusher returns at during bar change.

Medium fog speed: Speed pusher returns at during bar change.

Fast jog speed: Speed pusher returns at during bar change.

Rapid jog speed: Speed pusher returns at during bar change.

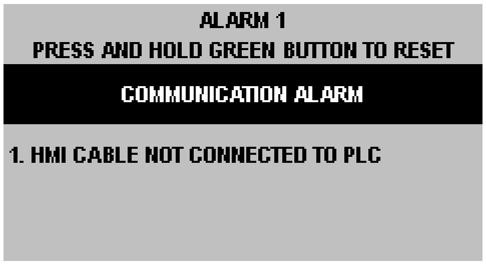

ALARM 1
PRESS AND HOLD GREEN BUTTON TO RESET

COMMUNICATION ALARM

1. HMI CABLE NOT CONNECTED TO PLC

-HMI Cable not attached to PLC - Check the cable from the PLC in the electrical cabinet (round black cable located on the front of the PLC next to the Run/Stop switch) to the back of the control panel (rectangular 9-pin plug connected to the COM 2 port).

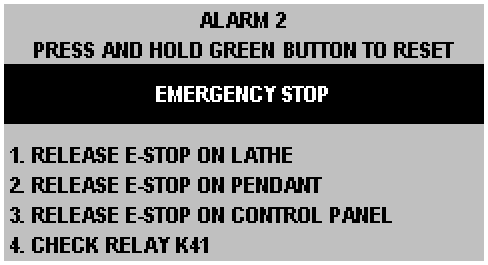

ALARM 2
PRESS AND HOLD GREEN BUTTON TO RESET

EMERGENCY STOP

1. RELEASE E-STOP ON LATHE
2. RELEASE E-STOP ON PENDANT
3. RELEASE E-STOP ON CONTROL PANEL
4. CHECK RELAY K41

-Release E-Stop on Lathe - Make sure lathe is not in an alarm other than a bar feeder alarm.
-Release E-Stop on Bar Feeder Pendant
-Release E-Stop on Bar Feeder Control Panel.
-Check relay K41

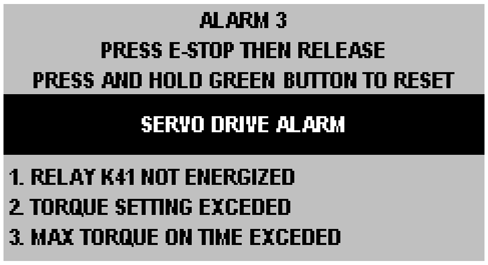

ALARM 3
PRESS E-STOP THEN RELEASE
PRESS AND HOLD GREEN BUTTON TO RESET

SERVO DRIVE ALARM

1. RELAY K41 NOT ENERGIZED
2. TORQUE SETTING EXCEDED
3. MAX TORQUE ON TIME EXCEDED

-K41 not energized
-Torque setting exceeded - Reduce the Open Collet Torque on User Parameter page 3.
-Max torque on time exceeded - Reduce the length of time the lathe collet is open when the bar feeder is in automatic.

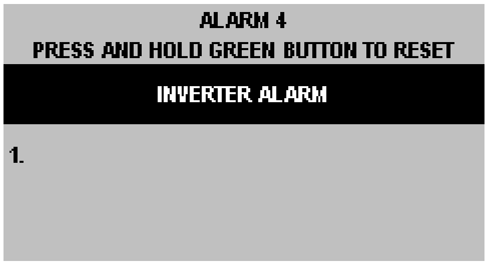

ALARM 4
PRESS AND HOLD GREEN BUTTON TO RESET

INVERTER ALARM

1.

-Inverter Alarm – Check alarm number on the Inverter module screen.

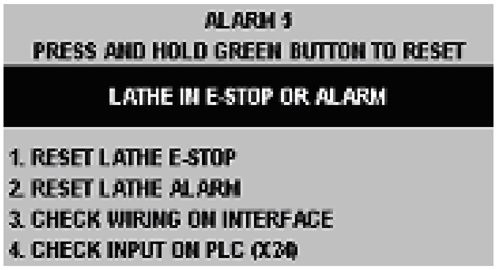

ALARM 9
PRESS AND HOLD GREEN BUTTON TO RESET

LATHE IN E-STOP OR ALARM

1. RESET LATHE E-STOP
2. RESET LATHE ALARM
3. CHECK WIRING ON INTERFACE
4. CHECK INPUT ON PLC (X24)

-Reset lathe e-stop
-Reset lathe alarm
-Check wiring on interface - Check for continuity between the wires for Emergency From Lathe (if used, check the interface drawing specific to the lathe).
-Check input on PLC (X24) – The input should change state when the lathe alarm is turned on and off (if used, check the interface drawing specific to the lathe).

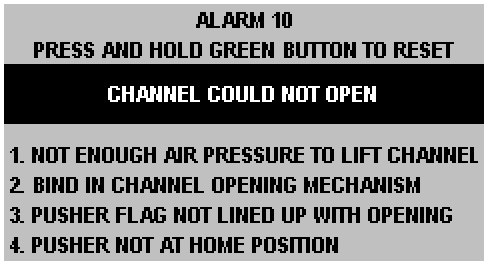

ALARM 10
PRESS AND HOLD GREEN BUTTON TO RESET

CHANNEL COULD NOT OPEN

1. NOT ENOUGH AIR PRESSURE TO LIFT CHANNEL
2. BIND IN CHANNEL OPENING MECHANISM
3. PUSHER FLAG NOT LINED UP WITH OPENING
4. PUSHER NOT AT HOME POSITION

-Parameter refers to the V-channel not lifting
-Not enough air pressure to lift channel – Not applicable on the Rebel 102SE
-Bind in channel opening mechanism – Check to see if the V-channel beam is level, check for obstructions to the V-channel.
-Pusher flag not lined up with opening – Not applicable on the Rebel 102SE
-Pusher not at home position – Re-zero the bar pusher.

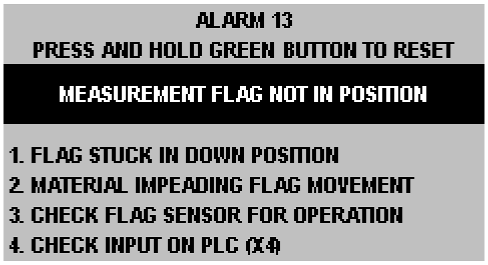

ALARM 13
PRESS AND HOLD GREEN BUTTON TO RESET

MEASUREMENT FLAG NOT IN POSITION

1. FLAG STUCK IN DOWN POSITION
2. MATERIAL IMPEADING FLAG MOVEMENT
3. CHECK FLAG SENSOR FOR OPERATION
4. CHECK INPUT ON PLC (X4)

-Flag stuck in down position – Manually operate the measuring flag. Check for debris impeding the operation of the flag. Check the flag for damage.
-Material impeding flag movement – Remove the material from the flag area.
-Check flag sensor for operation – Manually operate the flag and check to see that the LED on the proximity switch turns on when the flag is in the closed position.
-Check input on PLC (X4) – This input is operated by the S04 switch. The input should toggle with the opening and closing of the measuring flag.

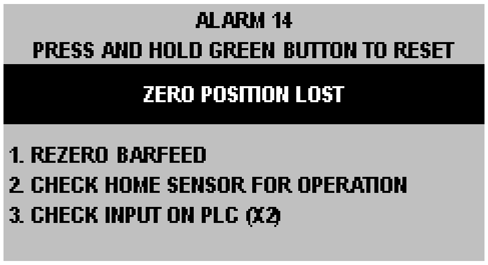

ALARM 14

PRESS AND HOLD GREEN BUTTON TO RESET

ZERO POSITION LOST

1. REZERO BARFEED
2. CHECK HOME SENSOR FOR OPERATION
3. CHECK INPUT ON PLC (X2)

-Rezero barfeed – Start with the guide channel closed and the pusher forward about 6 inches. Press and hold the forward and reverse buttons on the pendant. After 8 seconds the pusher will begin to move backward. Release the buttons. The pusher will move back to the proximity switch for zero and then stop.

-Check home sensor for operation – Move the bar pusher back and forth under the home proximity sensor and watch for the LED to toggle on and off.

-Check input on PLC (X2) - Move the bar pusher back and forth under the home proximity sensor and watch for the input X2 to turn on and off.

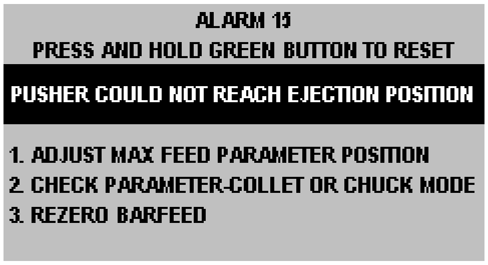

ALARM 15

PRESS AND HOLD GREEN BUTTON TO RESET

PUSHER COULD NOT REACH EJECTION POSITION

1. ADJUST MAX FEED PARAMETER POSITION
2. CHECK PARAMETER-COLLET OR CHUCK MODE
3. REZERO BARFEED

-Adjust max feed parameter position – Verify the position

-Check parameter – collet or chuck mode – Check the setting of this parameter, verify it is set correctly as the two parameters can have different max feed positions.

-Rezero barfeed – Start with the guide channel closed and the pusher forward about 12 inches. Press and hold the forward and reverse buttons on the pendant. After 8 seconds the pusher will begin to move backward. Release the buttons. The pusher will move back to the proximity switch for zero and then stop.

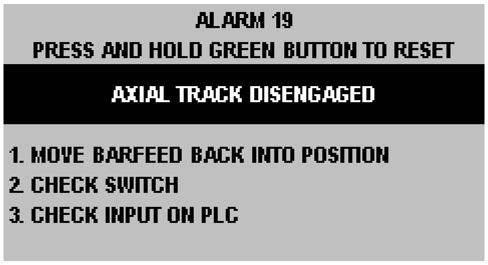

ALARM 19

PRESS AND HOLD GREEN BUTTON TO RESET

AXIAL TRACK DISENGAGED

1. MOVE BARFEED BACK INTO POSITION
2. CHECK SWITCH
3. CHECK INPUT ON PLC

-Move barfeed back into position – Push the bar feeder back to the limit stop in the run position and close the latches to secure the feeder to the axial track.

-Check Switch – Check the LS03 switch located on the axial track.

-Check input on PLC – Check input X13.

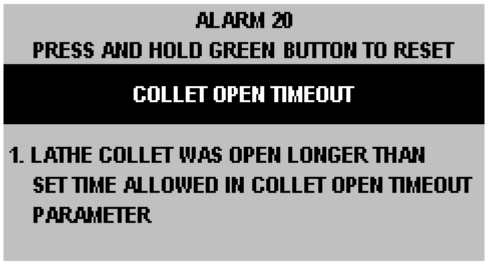
ALARM 20
PRESS AND HOLD GREEN BUTTON TO RESET

COLLET OPEN TIMEOUT

1. LATHE COLLET WAS OPEN LONGER THAN
   SET TIME ALLOWED IN COLLET OPEN TIMEOUT
   PARAMETER

-Lathe collet was open longer than set time allowed in collet open timeout parameter

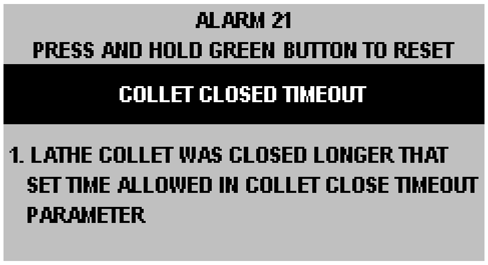
ALARM 21
PRESS AND HOLD GREEN BUTTON TO RESET

COLLET CLOSED TIMEOUT

1. LATHE COLLET WAS CLOSED LONGER THAT
   SET TIME ALLOWED IN COLLET CLOSE TIMEOUT
   PARAMETER

-Lathe collet was closed longer than set time allowed in collet close timeout parameter

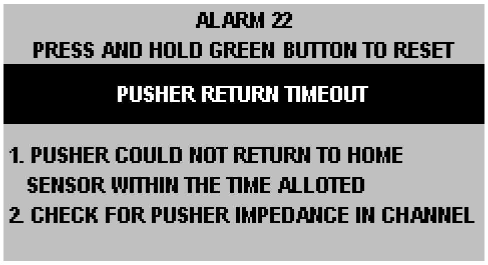
ALARM 22
PRESS AND HOLD GREEN BUTTON TO RESET

PUSHER RETURN TIMEOUT

1. PUSHER COULD NOT RETURN TO HOME
   SENSOR WITHIN THE TIME ALLOTED
2. CHECK FOR PUSHER IMPEDANCE IN CHANNEL

-Pusher could not return home within the time allotted – An internal timer for pusher return has been exceeded.
-Check for pusher impedance in channel – Check for blockage of the bar pusher, a bent bar pusher, check front pusher bushing.

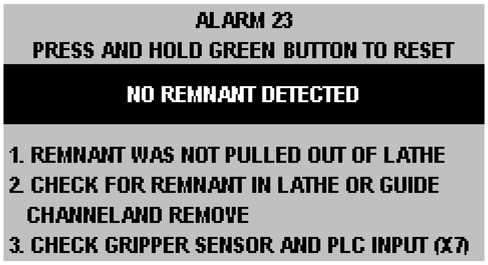
ALARM 23
PRESS AND HOLD GREEN BUTTON TO RESET

NO REMNANT DETECTED

1. REMNANT WAS NOT PULLED OUT OF LATHE
2. CHECK FOR REMNANT IN LATHE OR GUIDE
   CHANNELAND REMOVE
3. CHECK GRIPPER SENSOR AND PLC INPUT (X7)

Not used on the Rebel 102SE

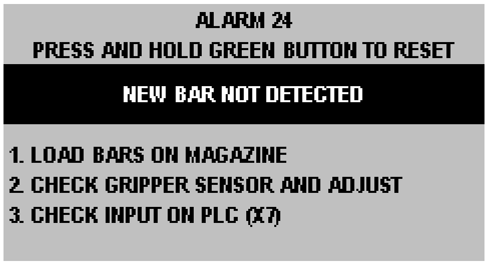

ALARM 24
PRESS AND HOLD GREEN BUTTON TO RESET
NEW BAR NOT DETECTED

1. LOAD BARS ON MAGAZINE
2. CHECK GRIPPER SENSOR AND ADJUST
3. CHECK INPUT ON PLC (X7)

This alarm occurs when the pre-feed pusher reaches the stroke limit without tripping the measuring gate do turn off the S4 proximity switch.

-Load bars on magazine
-Check gripper sensor and adjust – Not applicable on the Rebel 102SE
-Check input on PLC (X4) – Input 4 is turned on and off by the S04 switch on the measuring gate.

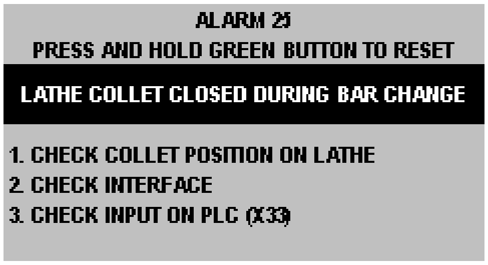

ALARM 25
PRESS AND HOLD GREEN BUTTON TO RESET
LATHE COLLET CLOSED DURING BAR CHANGE

1. CHECK COLLET POSITION ON LATHE
2. CHECK INTERFACE
3. CHECK INPUT ON PLC (X33)

-Check collet position on lathe – Verify state of the lathe collet and compare to the bar feeder screen to see if they match.
-Check interface – See interface drawing specific to the lathe, check connections for the collet open signal.
-Check input on PLC (X27) –**Input 27** should toggle on and off with the opening and closing of the lathe collet.

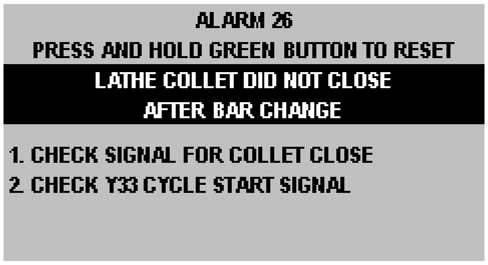

ALARM 26
PRESS AND HOLD GREEN BUTTON TO RESET
LATHE COLLET DID NOT CLOSE
AFTER BAR CHANGE

1. CHECK SIGNAL FOR COLLET CLOSE
2. CHECK Y33 CYCLE START SIGNAL

-Check signal for collet close – Verify that the lathe collet is not closed.
-Check Y33 cycle start signal – Output **Y27** and relay R8 should turn on briefly when the bar feeder reaches the facing position.
-Check input on PLC (X27) – The input should toggle on and off with the opening and closing of the lathe collet.

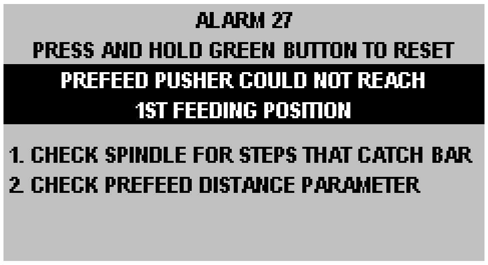

ALARM 27
PRESS AND HOLD GREEN BUTTON TO RESET
PREFEED PUSHER COULD NOT REACH
1ST FEEDING POSITION

1. CHECK SPINDLE FOR STEPS THAT CATCH BAR
2. CHECK PREFEED DISTANCE PARAMETER

-Check spindle for steps that catch bar
-Check prefeed distance parameter - Setting should place the rear of the bar to rest slightly on the edge of the channel so the pusher collet will clear the bar when the channel closes.
-Rotate the lathe spindle during the bar change – If possible, rotate the lathe spindle at 50 – 100 RPM during the bar change. Most lathes can do this through the bar change program. The bar feeder also has an Impulse relay that can be wired to the lathe to control the spindle revolution during the bar change (the lathe must have a provision for this signal).

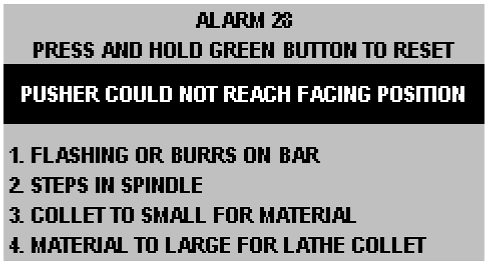

ALARM 28
PRESS AND HOLD GREEN BUTTON TO RESET
PUSHER COULD NOT REACH FACING POSITION

1. FLASHING OR BURRS ON BAR
2. STEPS IN SPINDLE
3. COLLET TO SMALL FOR MATERIAL
4. MATERIAL TO LARGE FOR LATHE COLLET

-Flashing or burrs on bar – The front of the bar must be at least burr free and should have a small chamfer.
-Steps in spindle – A spindle liner may be required to provide a clear path for the material. A larger chamfer on the front end of the bar may help the material past the steps.
-Collet too small for material –Not applicable on the Rebel 102SE.
-Material too large for lathe collet – Verify the collet diameter versus the OD of the bar stock

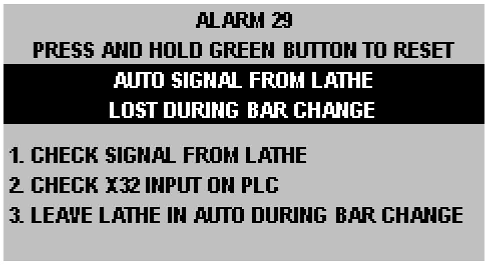

ALARM 29
PRESS AND HOLD GREEN BUTTON TO RESET
AUTO SIGNAL FROM LATHE
LOST DURING BAR CHANGE

1. CHECK SIGNAL FROM LATHE
2. CHECK X32 INPUT ON PLC
3. LEAVE LATHE IN AUTO DURING BAR CHANGE

-Check signal from lathe – Switch the lathe from Auto to Manual modes and check the signal to the bar feeder.
-Check X22 input on PLC – **Input 22** changes state with the mode of the lathe.
-Leave lathe in auto during bar change – Some lathes must be left in cycle to maintain the automatic signal. Turn of the single block mode and leave the lathe door closed during bar change.

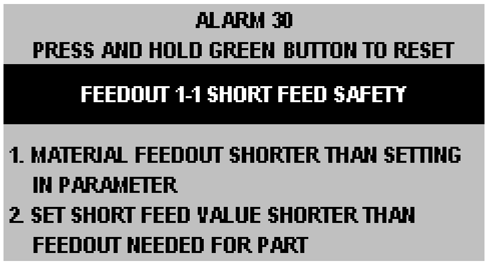
ALARM 30
PRESS AND HOLD GREEN BUTTON TO RESET
FEEDOUT 1-1 SHORT FEED SAFETY
1. MATERIAL FEEDOUT SHORTER THAN SETTING IN PARAMETER
2. SET SHORT FEED VALUE SHORTER THAN FEEDOUT NEEDED FOR PART

-Material feedout shorter than setting in parameter – Check open collet torque setting. Check lathe collet/spindle for debris. Check for impedance to the bar pusher.
-Set short feed value shorter than feedout needed for part – The value should be set at least 1mm shorter than the part feedout.

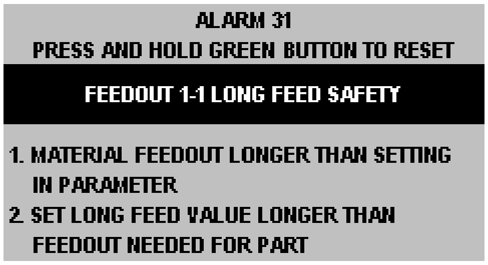
ALARM 31
PRESS AND HOLD GREEN BUTTON TO RESET
FEEDOUT 1-1 LONG FEED SAFETY
1. MATERIAL FEEDOUT LONGER THAN SETTING IN PARAMETER
2. SET LONG FEED VALUE LONGER THAN FEEDOUT NEEDED FOR PART

-Material feedout longer that setting in parameter – Tighten the pusher drive chain. Verify the pusher collet is fully seated on the material.
-Set long feed value longer than feedout for part – The value should be set at least 1mm longer than the part feedout.

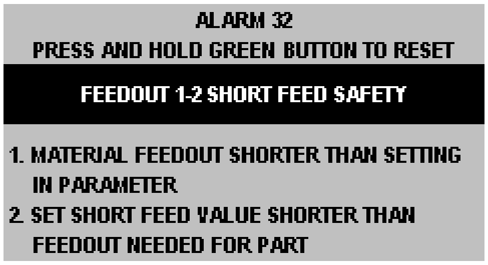
ALARM 32
PRESS AND HOLD GREEN BUTTON TO RESET
FEEDOUT 1-2 SHORT FEED SAFETY
1. MATERIAL FEEDOUT SHORTER THAN SETTING IN PARAMETER
2. SET SHORT FEED VALUE SHORTER THAN FEEDOUT NEEDED FOR PART

-Material feedout shorter than setting in parameter – Check open collet torque setting. Check lathe collet/spindle for debris. Check for impedance to the bar pusher.
-Set short feed value shorter than feedout needed for part – The value should be set at least 1mm shorter than the part feedout.

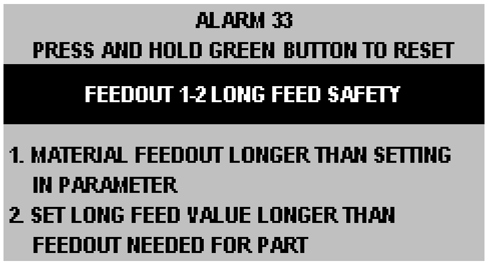

ALARM 33

PRESS AND HOLD GREEN BUTTON TO RESET

FEEDOUT 1-2 LONG FEED SAFETY

1. MATERIAL FEEDOUT LONGER THAN SETTING IN PARAMETER
2. SET LONG FEED VALUE LONGER THAN FEEDOUT NEEDED FOR PART

-Material feedout longer that setting in parameter – Tighten the pusher drive chain. Verify the pusher collet is fully seated on the material.
-Set long feed value longer than feedout for part – The value should be set at least 1mm longer than the part feedout.

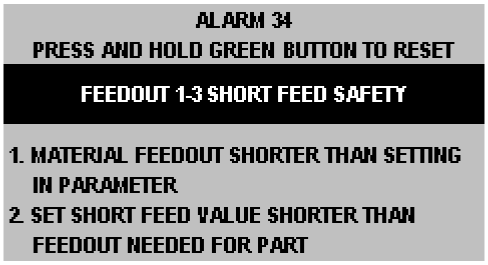

ALARM 34

PRESS AND HOLD GREEN BUTTON TO RESET

FEEDOUT 1-3 SHORT FEED SAFETY

1. MATERIAL FEEDOUT SHORTER THAN SETTING IN PARAMETER
2. SET SHORT FEED VALUE SHORTER THAN FEEDOUT NEEDED FOR PART

-Material feedout shorter than setting in parameter – Check open collet torque setting. Check lathe collet/spindle for debris. Check for impedance to the bar pusher.
-Set short feed value shorter than feedout needed for part – The value should be set at least 1mm shorter than the part feedout.

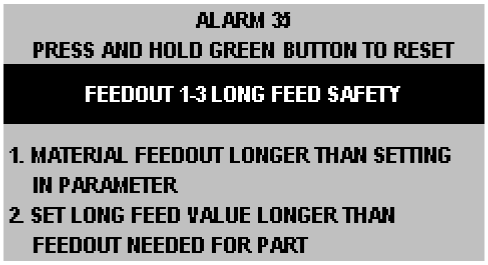

ALARM 35

PRESS AND HOLD GREEN BUTTON TO RESET

FEEDOUT 1-3 LONG FEED SAFETY

1. MATERIAL FEEDOUT LONGER THAN SETTING IN PARAMETER
2. SET LONG FEED VALUE LONGER THAN FEEDOUT NEEDED FOR PART

-Material feedout longer that setting in parameter – Tighten the pusher drive chain. Verify the pusher collet is fully seated on the material.
-Set long feed value longer than feedout for part – The value should be set at least 1mm longer than the part feedout.

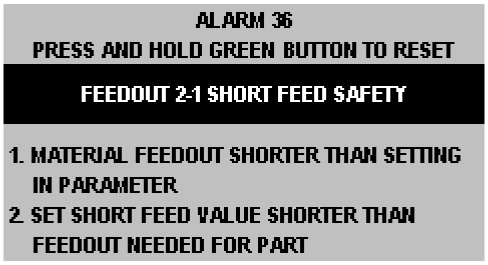

ALARM 36
PRESS AND HOLD GREEN BUTTON TO RESET

FEEDOUT 2-1 SHORT FEED SAFETY

1. MATERIAL FEEDOUT SHORTER THAN SETTING IN PARAMETER
2. SET SHORT FEED VALUE SHORTER THAN FEEDOUT NEEDED FOR PART

-Material feedout shorter than setting in parameter – Check open collet torque setting. Check lathe collet/spindle for debris. Check for impedance to the bar pusher.
-Set short feed value shorter than feedout needed for part – The value should be set at least 1mm shorter than the part feedout.

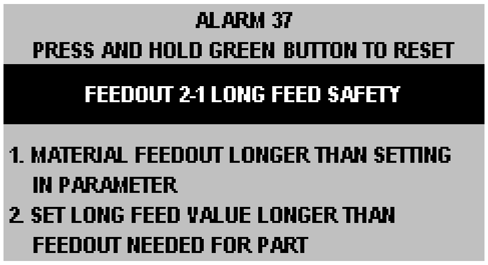

ALARM 37
PRESS AND HOLD GREEN BUTTON TO RESET

FEEDOUT 2-1 LONG FEED SAFETY

1. MATERIAL FEEDOUT LONGER THAN SETTING IN PARAMETER
2. SET LONG FEED VALUE LONGER THAN FEEDOUT NEEDED FOR PART

-Material feedout longer that setting in parameter – Tighten the pusher drive chain. Verify the pusher collet is fully seated on the material.
-Set long feed value longer than feedout for part – The value should be set at least 1mm longer than the part feedout.

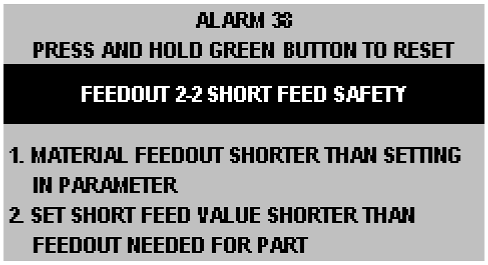

ALARM 38
PRESS AND HOLD GREEN BUTTON TO RESET

FEEDOUT 2-2 SHORT FEED SAFETY

1. MATERIAL FEEDOUT SHORTER THAN SETTING IN PARAMETER
2. SET SHORT FEED VALUE SHORTER THAN FEEDOUT NEEDED FOR PART

-Material feedout shorter than setting in parameter – Check open collet torque setting. Check lathe collet/spindle for debris. Check for impedance to the bar pusher.
-Set short feed value shorter than feedout needed for part – The value should be set at least 1mm shorter than the part feedout.

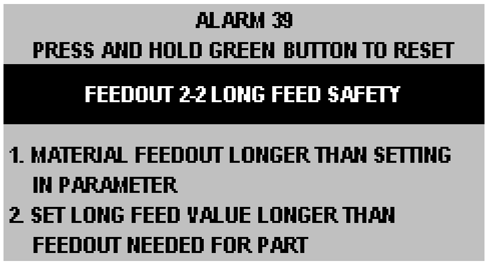

ALARM 39
PRESS AND HOLD GREEN BUTTON TO RESET
FEEDOUT 2-2 LONG FEED SAFETY
1. MATERIAL FEEDOUT LONGER THAN SETTING IN PARAMETER
2. SET LONG FEED VALUE LONGER THAN FEEDOUT NEEDED FOR PART

-Material feedout longer that setting in parameter – Tighten the pusher drive chain. Verify the pusher collet is fully seated on the material.
-Set long feed value longer than feedout for part – The value should be set at least 1mm longer than the part feedout.

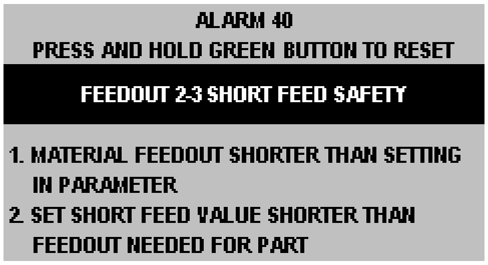

ALARM 40
PRESS AND HOLD GREEN BUTTON TO RESET
FEEDOUT 2-3 SHORT FEED SAFETY
1. MATERIAL FEEDOUT SHORTER THAN SETTING IN PARAMETER
2. SET SHORT FEED VALUE SHORTER THAN FEEDOUT NEEDED FOR PART

-Material feedout shorter than setting in parameter – Check open collet torque setting. Check lathe collet/spindle for debris. Check for impedance to the bar pusher.
-Set short feed value shorter than feedout needed for part – The value should be set at least 1mm shorter than the part feedout.

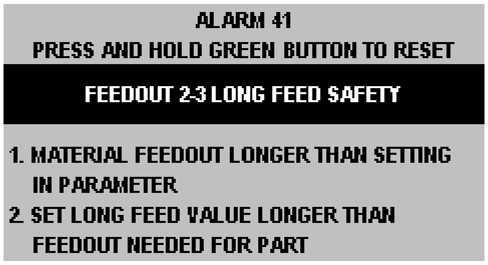

ALARM 41
PRESS AND HOLD GREEN BUTTON TO RESET
FEEDOUT 2-3 LONG FEED SAFETY
1. MATERIAL FEEDOUT LONGER THAN SETTING IN PARAMETER
2. SET LONG FEED VALUE LONGER THAN FEEDOUT NEEDED FOR PART

-Material feedout longer that setting in parameter – Tighten the pusher drive chain. Verify the pusher collet is fully seated on the material.
-Set long feed value longer than feedout for part – The value should be set at least 1mm longer than the part feedout.

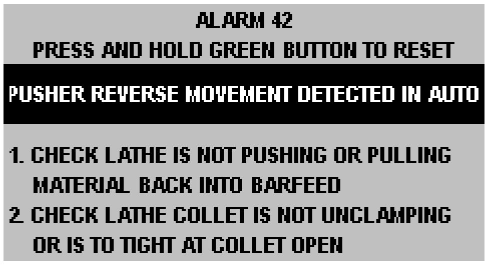

ALARM 42
PRESS AND HOLD GREEN BUTTON TO RESET

PUSHER REVERSE MOVEMENT DETECTED IN AUTO

1. CHECK LATHE IS NOT PUSHING OR PULLING MATERIAL BACK INTO BARFEED
2. CHECK LATHE COLLET IS NOT UNCLAMPING OR IS TO TIGHT AT COLLET OPEN

-When the bar feeder is in Auto and the lathe collet open, reverse movement in excess of 4mm was detected.

-Check lathe is not pushing or pulling material back into barfeed – Check the bar feeder synchronization device. Increase the dwell after the collet open before the re-grip.

-Check lathe collet is not unclamping or is too tight at collet open – Clean and adjust the lathe collet.

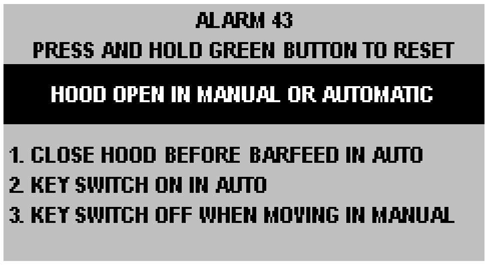

ALARM 43
PRESS AND HOLD GREEN BUTTON TO RESET

HOOD OPEN IN MANUAL OR AUTOMATIC

1. CLOSE HOOD BEFORE BARFEED IN AUTO
2. KEY SWITCH ON IN AUTO
3. KEY SWITCH OFF WHEN MOVING IN MANUAL

-Close hood before start of bar change or channel open/close – The safety switch on the hood sends a signal to the PLC input X5. Check the switch to make sure it is connected.

-Check input on PLC (X5) – Observe input X5 while opening and closing the hood. The input should change state with the motion of the hood.

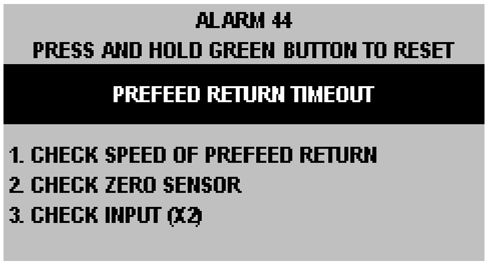

ALARM 44
PRESS AND HOLD GREEN BUTTON TO RESET

PREFEED RETURN TIMEOUT

1. CHECK SPEED OF PREFEED RETURN
2. CHECK ZERO SENSOR
3. CHECK INPUT (X2)

-Check speed of prefeed return – The speed may be too slow to accomplish the return within the allotted time.

-Check zero sensor – Verify operation of the sensor by observing the LED on switch S01 and input X2.

-Check input X2 – X2 should light when switch S01 lights and turn off when switch S01 turns off.

-***Check for impedance to the bar pusher*** – Check for debris or protrusions in the spindle liner, telescoping nose and guide channel. Check for protruding roll pins on the bar pusher.

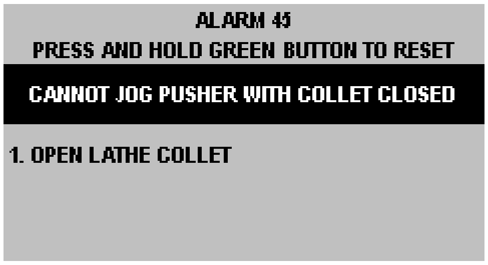

ALARM 45
PRESS AND HOLD GREEN BUTTON TO RESET
CANNOT JOG PUSHER WITH COLLET CLOSED
1. OPEN LATHE COLLET

-Open lathe collet – Verify that the lathe collet is open.
-Check input X27 – The input should turn on and off with the collet opening and closing.

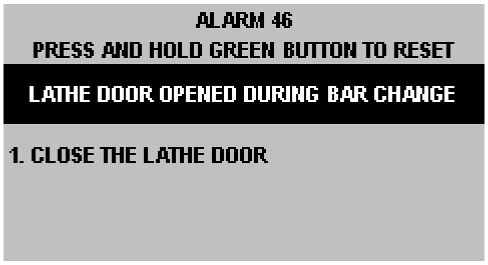

ALARM 46
PRESS AND HOLD GREEN BUTTON TO RESET
LATHE DOOR OPENED DURING BAR CHANGE
1. CLOSE THE LATHE DOOR

-Close the lathe door – Verify that the lathe door is closed and the safety switches are enabled.
-Check input X23 – The input should turn on and off with the door opening and closing.

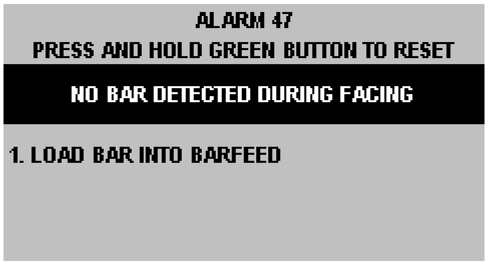

ALARM 47
PRESS AND HOLD GREEN BUTTON TO RESET
NO BAR DETECTED DURING FACING
1. LOAD BAR INTO BARFEED

-Load bar into barfeed – Place material on the bar feeder magazine before the bar change begins.
-Check operation and adjustment of the bar separators – If the separators are not properly adjusted the bar stock may not fall into the channel.
-Check the measuring switch– The switch is on the measuring gate assembly. Verify operation of the switch by observing input X4 as the measuring flag is opened and closed.

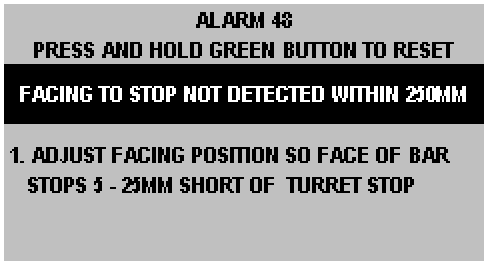

ALARM 48

PRESS AND HOLD GREEN BUTTON TO RESET

FACING TO STOP NOT DETECTED WITHIN 250MM

1. ADJUST FACING POSITION SO FACE OF BAR STOPS 5 - 25MM SHORT OF TURRET STOP

-Adjust facing position – Alarm occurs when facing mode is set to Turret Stop and the bar travels 5 – 25mm short of the turret stop or in excess of 250mm past the facing length.

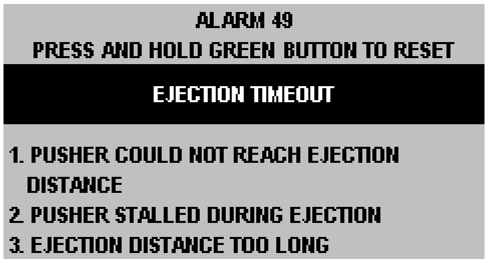

ALARM 49

PRESS AND HOLD GREEN BUTTON TO RESET

EJECTION TIMEOUT

1. PUSHER COULD NOT REACH EJECTION DISTANCE
2. PUSHER STALLED DURING EJECTION
3. EJECTION DISTANCE TOO LONG

-Pusher could not reach ejection distance – Verify the stock stop is far enough away from the chuck to allow the remnant to be pushed clear of the chuck.
-Pusher stalled during ejection – See above, increase torque setting.
-Ejection distance too long – Reduce ejection distance in parameter screen 13.

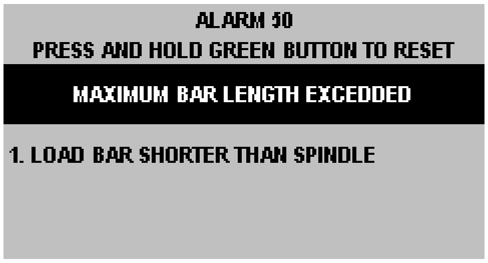

ALARM 50

PRESS AND HOLD GREEN BUTTON TO RESET

MAXIMUM BAR LENGTH EXCEDDED

1. LOAD BAR SHORTER THAN SPINDLE

-Load bar shorter than spindle – Bar length exceeds parameter value, use shorter bar. Alter maximum bar length in parameter page 13 but DO NOT allow the end of the bar to extend past the end of the spindle/actuator as injury or death and machine damage may occur.

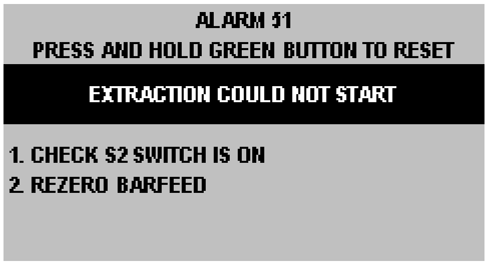

ALARM 51

PRESS AND HOLD GREEN BUTTON TO RESET

EXTRACTION COULD NOT START

1. CHECK S2 SWITCH IS ON
2. REZERO BARFEED

-Check S1 switch is on – Verify that the LED of the S01 switch is on when the pusher reaches the home position and that input X2 is on when the LED of S01 is on.
-Rezero Barfeed - Start with the guide channel closed and the pusher forward about 12 inches. Press and hold the forward and reverse buttons on the pendant. After 8 seconds the pusher will

begin to move backward. Release the buttons. The pusher will move back to the proximity switch for zero and then stop.

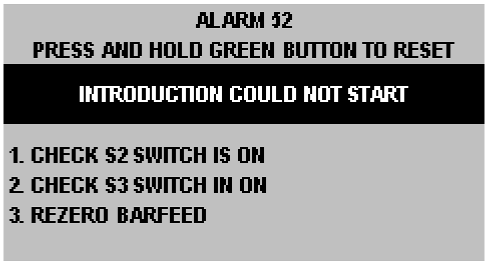

ALARM 52

PRESS AND HOLD GREEN BUTTON TO RESET

INTRODUCTION COULD NOT START

1. CHECK S2 SWITCH IS ON
2. CHECK S3 SWITCH IN ON
3. REZERO BARFEED

-Introduction could not start – Not applicable on the Rebel 102SE

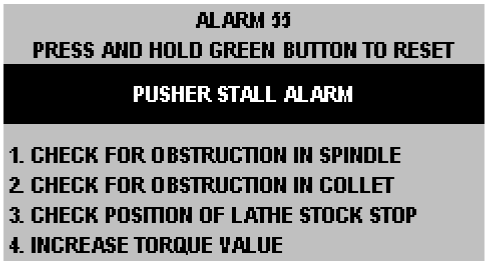

ALARM 55

PRESS AND HOLD GREEN BUTTON TO RESET

PUSHER STALL ALARM

1. CHECK FOR OBSTRUCTION IN SPINDLE
2. CHECK FOR OBSTRUCTION IN COLLET
3. CHECK POSITION OF LATHE STOCK STOP
4. INCREASE TORQUE VALUE

-Check for obstruction in spindle – Check the lathe spindle for debris.
-Check for obstruction in collet – Check the lathe collet for debris.
-Check position of lathe stock stop – Make sure the turret stop of the lathe is not preventing the bar pusher from reaching a programmed position.
-Increase Torque Value – Increase the torque over-ride value on parameter page 3.
-Check for damaged channel sections – Damaged channel may cause the pusher to stall.
-Check for damaged pusher flags – A damaged pusher flag may stall the bar pusher.

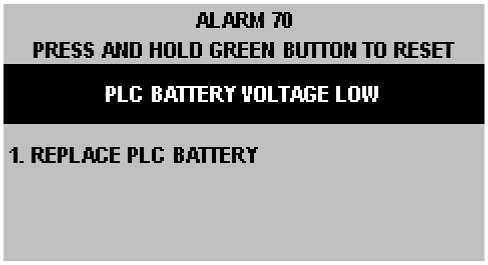

ALARM 70

PRESS AND HOLD GREEN BUTTON TO RESET

PLC BATTERY VOLTAGE LOW

1. REPLACE PLC BATTERY

-Replace PLC battery – The PLC battery is exhausted. Do not turn off power to the bar feeder before the battery is replaced or data may be lost.

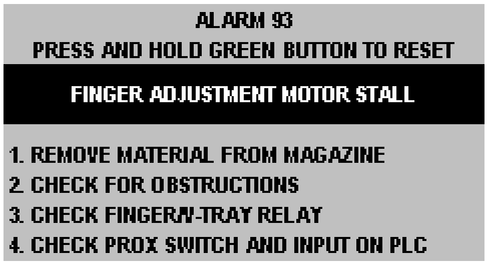

ALARM 93
PRESS AND HOLD GREEN BUTTON TO RESET

FINGER ADJUSTMENT MOTOR STALL

1. REMOVE MATERIAL FROM MAGAZINE
2. CHECK FOR OBSTRUCTIONS
3. CHECK FINGER/V-TRAY RELAY
4. CHECK PROX SWITCH AND INPUT ON PLC

-Remove material from magazine – If material is on the magazine during the finger adjustment the motor may stall out.
-Check for obstructions – Check the area around the lifting fingers on the magazine for foreign objects or debris that may block the movement of the fingers.
-Check finger/V-tray relay – Relay R15 switches power from the V-channel motor to the finger motor when engaged.
-Check proximity switch and input on the PLC – The counter for the finger motor activates prox switch S02. The input on the PLC from the switch is X0.

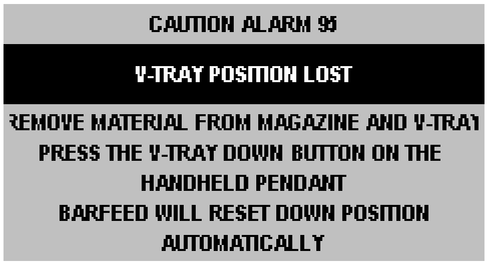

CAUTION ALARM 95

V-TRAY POSITION LOST

REMOVE MATERIAL FROM MAGAZINE AND V-TRAY
PRESS THE V-TRAY DOWN BUTTON ON THE
HANDHELD PENDANT
BARFEED WILL RESET DOWN POSITION
AUTOMATICALLY

-V-tray position lost – Follow the directions on the screen to reset the counter that tracks the position of the V-channel.

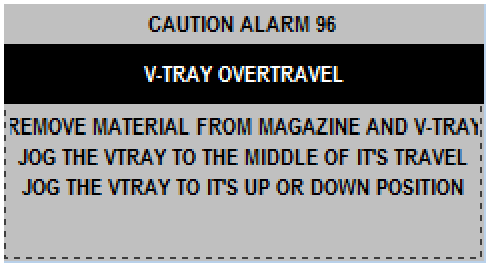

CAUTION ALARM 96

V-TRAY OVERTRAVEL

REMOVE MATERIAL FROM MAGAZINE AND V-TRAY
JOG THE VTRAY TO THE MIDDLE OF IT'S TRAVEL
JOG THE VTRAY TO IT'S UP OR DOWN POSITION

-V-tray Overtravel-The V-tray has traveled in excess of it’s limits in the up or down direction. Follow the screen directions an use the Jog/Set V-Tray screen in the Maintenance section 8 to recover from this alarm.

13. Electrical System

Warning Danger of electrical shock. Only experienced personnel should open the electrical cabinet. Turn off the main switch on the electrical cabinet door before working on this unit.

12.1 Electrical schematic table of contents:

Rungs 11 – 20	Electrical Panel Layout
Rungs 21 – 30	Remote Pendant Layout
Rungs 31 – 40	Main PC Board
Rungs 41 – 50	Main Circuit 1
Rungs 51 – 60	Main Circuit 2
Rungs 61 – 70	PLC Input 1
Rungs 71 – 80	PLC Input 2
Rungs 81 – 90	PLC Input 3
Rungs 91 – 100	PLC Output 1
Rungs 101 – 110	PLC Output 2
Rungs 111 – 120	PLC Output 3
Rungs 121 – 130	Inverter Circuit
Rungs 131 – 140	Pendant LED Circuit
Rungs 141 – 150	Interface Input Signals
Rungs 151 – 160	Interface Output Signals
Rungs 161 – 170	PC Board Circuit of Pendant LED
Rungs 171 – 180	Main PC Board Circuit

REV	LOCATION	DESCRIPTION	DATE	INITIALS
-	-	-	-	-

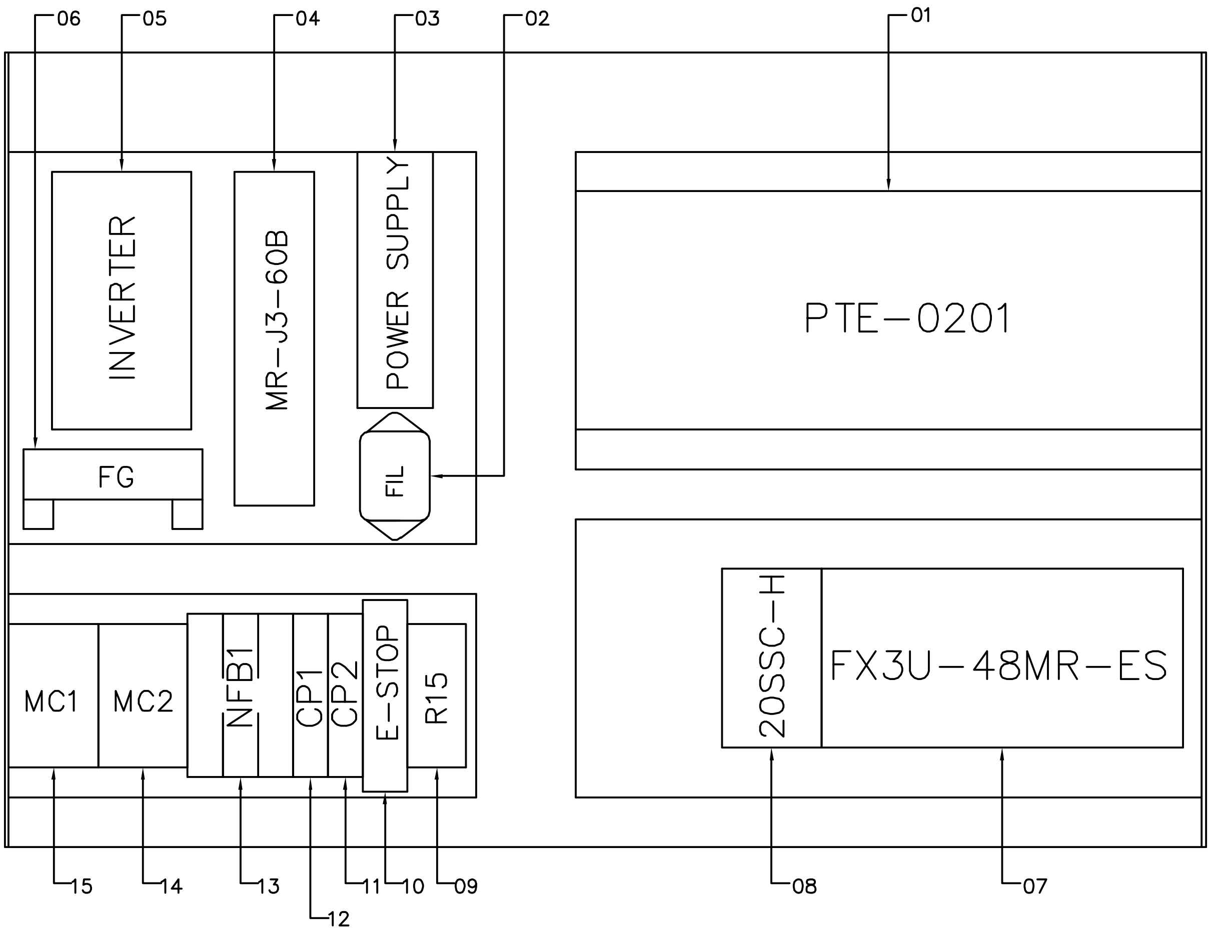
06
05
04
03
02
01
INVERTER
MR-J3-60B
POWER SUPPLY
FG
FIL
PTE-0201
MC1
MC2
NFB1
CP1
CP2
E-STOP
R15
20SSC-H
FX3U-48MR-ES
15
14
13
12
11
10
09
08
07

NO.	PART NO.	CODE	NAME
1	J630101	MPCB	MAIN PC RELAY BOARD
2	J220405	FIL	FILTER
3	J230100	PS	POWER SUPPLY
4	J220801	SV	SERVO MOTOR DRIVER
5	J220700	INV	INVERTER
6	J631202	FG	FG
7	J210700	PLC	PROGRAMMABLE LOGIC CONTROLLER
8	J220202	20SSC-H	MOTION MODULE
9	J310203 + J310211	R15	RELAY + PEDESTAL
10	J310704	E-STOP	EMERGENCY STOP
11	J310505	CP2	CIRCUIT PROTECTION
12	J310505	CP1	CIRCUIT PROTECTION
13	J310504	NFB1	NO FUSE BREAKER
14	J312704	MC2	MAGNETIC CONTACTOR
15	J312704	MC1	MAGNETIC CONTACTOR

EDGE Technologies

Electrical Panel Layout
REBEL 102 SE
DRAWN BY D. Feltz
SCALE: 1:1
DATE: 01-29-09
CHK'D BY
DRAWING NO. T998EL00201
REV -

REV	LOCATION	DESCRIPTION	DATE	INITIALS
-	-	-	-	-

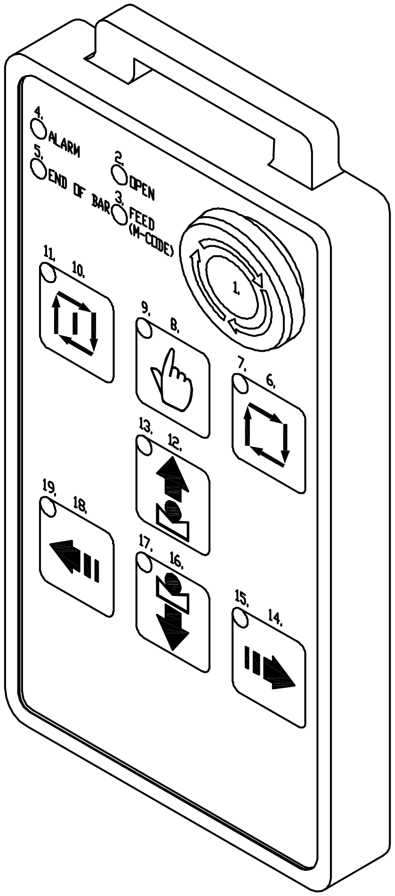
4.
ALARM
5.
END OF BAR
2.
OPEN
3.
FEED
(M-CODE)
1.
11.
10.
9.
8.
7.
6.
13.
12.
19.
18.
17.
16.
15.
14.

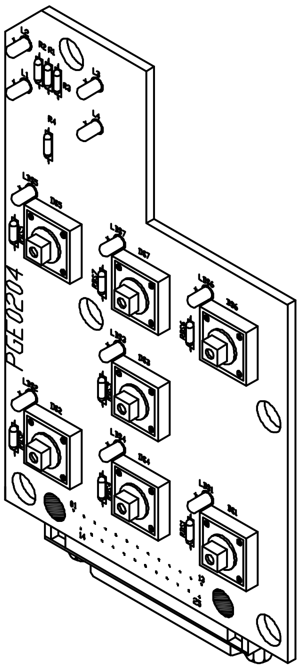

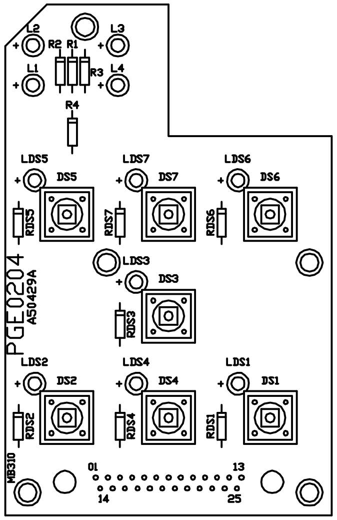
L2
R2
R1
L3
L1
R3
L4
R4
LDS5
DS5
LDS7
DS7
LDS6
DS6
RDS5
RDS7
RDS6
LDS3
DS3
RDS3
PGE0204
A50429A
LDS2
DS2
LDS4
DS4
LDS1
DS1
RDS2
RDS4
RDS1
MB310
01
13
14
25

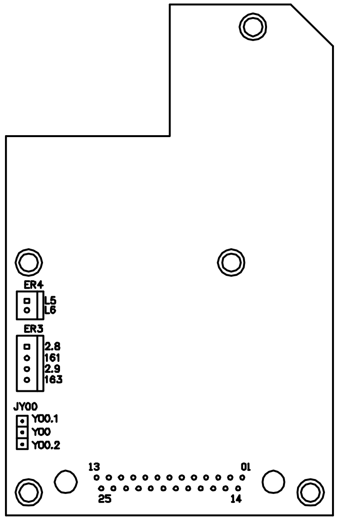
ER4
L5
L6
ER3
2.8
161
2.9
163
JY00
Y00.1
Y00
Y00.2
13
01
25
14

EDGE Technologies

Remote Pendant Layout

REBEL 102 SE

DRAWN BY	SCALE: 1:1	DATE: 01-29-09	
D. Feltz	DRAWING NO.		REV
CHK'D BY	T998EL00501		-

REV	LOCATION	DESCRIPTION	DATE	INITIALS
-	-	-	-	-

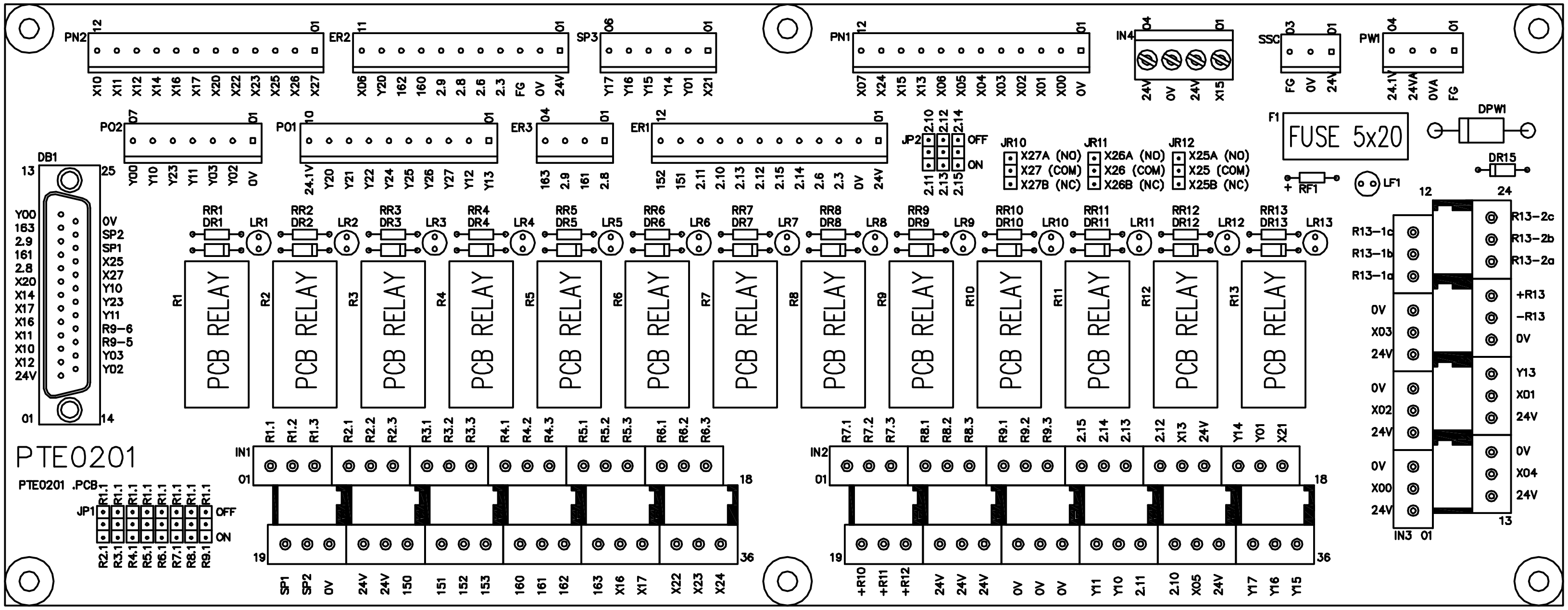
PTE0201
PTE0201 .PCB
DB1
13
25
01
14
Y00
163
2.9
161
2.8
X20
X14
X17
X16
X11
X10
X12
24V
0V
SP2
SP1
X25
X27
Y10
Y23
Y11
R9-6
R9-5
Y03
Y02
PN2
12
01
X10
X11
X12
X14
X16
X17
X20
X22
X23
X25
X26
X27
ER2
11
X06
Y20
162
160
2.9
2.8
2.6
2.3
FG
0V
24V
SP3
06
Y17
Y16
Y15
Y14
Y01
X21
PN1
X07
X24
X15
X13
X06
X05
X04
X03
X02
X01
X00
0V
IN4
04
24V
0V
24V
X15
SSC
03
FG
0V
24V
PW1
24.1V
24VA
0VA
FG
PO2
07
Y00
Y10
Y23
Y11
Y03
Y02
0V
PO1
10
24.1V
Y20
Y21
Y22
Y24
Y25
Y26
Y27
Y12
Y13
ER3
163
2.9
161
2.8
ER1
152
151
2.11
2.10
2.13
2.12
2.15
2.14
2.6
2.3
0V
24V
JP2
2.10
2.12
2.14
2.11
2.13
2.15
OFF
ON
JR10
X27A (NO)
X27 (COM)
X27B (NC)
JR11
X26A (NO)
X26 (COM)
X26B (NC)
JR12
X25A (NO)
X25 (COM)
X25B (NC)
F1
FUSE 5x20
DPW1
DR15
RF1
LF1
RR1
DR1
LR1
RR2
DR2
LR2
RR3
DR3
LR3
RR4
DR4
LR4
RR5
DR5
LR5
RR6
DR6
LR6
RR7
DR7
LR7
RR8
DR8
LR8
RR9
DR9
LR9
RR10
DR10
LR10
RR11
DR11
LR11
RR12
DR12
LR12
RR13
DR13
LR13
R1
R2
R3
R4
R5
R6
R7
R8
R9
R10
R11
R12
R13
PCB RELAY
IN1
R1.1
R1.2
R1.3
R2.1
R2.2
R2.3
R3.1
R3.2
R3.3
R4.1
R4.2
R4.3
R5.1
R5.2
R5.3
R6.1
R6.2
R6.3
18
19
36
SP1
SP2
0V
24V
24V
150
151
152
153
160
161
162
163
X16
X17
X22
X23
X24
IN2
R7.1
R7.2
R7.3
R8.1
R8.2
R8.3
R9.1
R9.2
R9.3
2.15
2.14
2.13
2.12
X13
24V
Y14
Y01
X21
+R10
+R11
+R12
24V
24V
24V
0V
0V
0V
Y11
Y10
2.11
2.10
X05
24V
Y17
Y16
Y15
JP1
R2.1
R3.1
R4.1
R5.1
R6.1
R7.1
R8.1
R9.1
R1.1
OFF
ON
IN3
R13-1c
R13-1b
R13-1a
0V
X03
24V
0V
X02
24V
0V
X00
24V
R13-2c
R13-2b
R13-2a
+R13
-R13
0V
Y13
X01
24V
0V
X04
24V
24

EDGE Technologies

Main PC Board
REBEL 102 SE

DRAWN BY D. Feltz	SCALE: 1:1	DATE: 01-29-09
CHK'D BY	DRAWING NO. T998EL00601	REV -

REV	LOCATION	DESCRIPTION	DATE	INITIALS
-	-	-	-	-

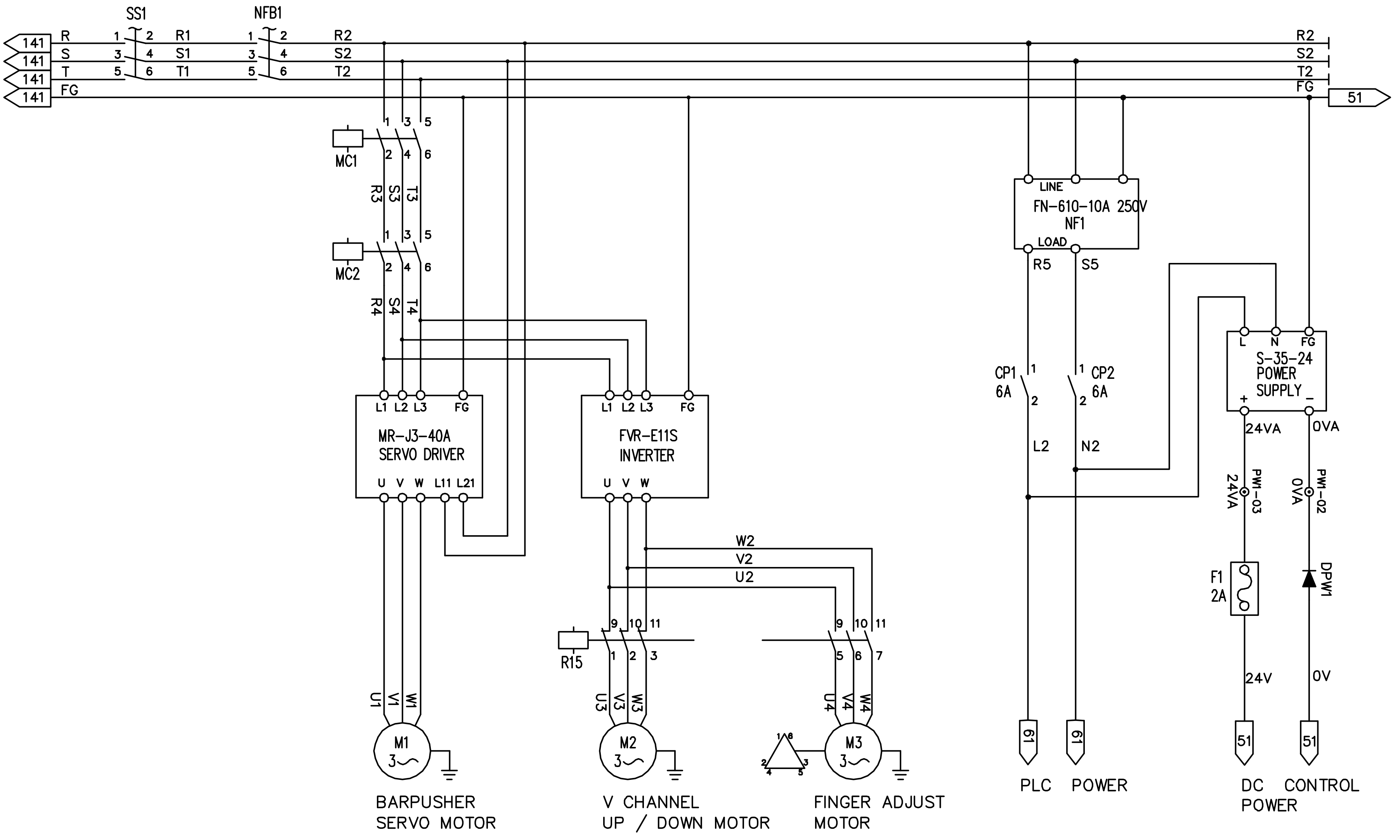
41
42
43
44
45
46
47
48
49
50
A
B
C
D
E
F
G
141
R
S
T
FG
SS1
R1
S1
T1
NFB1
R2
S2
T2
MC1
R3
S3
T3
MC2
R4
S4
T4
MR-J3-40A
SERVO DRIVER
L1 L2 L3 FG
U V W L11 L21
FVR-E11S
INVERTER
U1
V1
W1
M1
BARPUSHER
SERVO MOTOR
R15
U2
V2
W2
U3
V3
W3
M2
V CHANNEL
UP / DOWN MOTOR
U4
V4
W4
M3
FINGER ADJUST
MOTOR
51
LINE
FN-610-10A 250V
NF1
LOAD
R5
S5
CP1
6A
CP2
6A
L2
N2
61
PLC POWER
S-35-24
POWER
SUPPLY
L N FG
+ -
24VA
0VA
PW1-03
PW1-02
F1
2A
DPW1
24V
0V
DC CONTROL
POWER

EDGE Technologies

Main Circuit 1
REBEL 102 SE
DRAWN BY D. Feltz
CHK'D BY
SCALE: 1:1
DATE: 01-29-09
DRAWING NO. T998EL00701
REV -

REV	LOCATION	DESCRIPTION	DATE	INITIALS
-	-	-	-	-

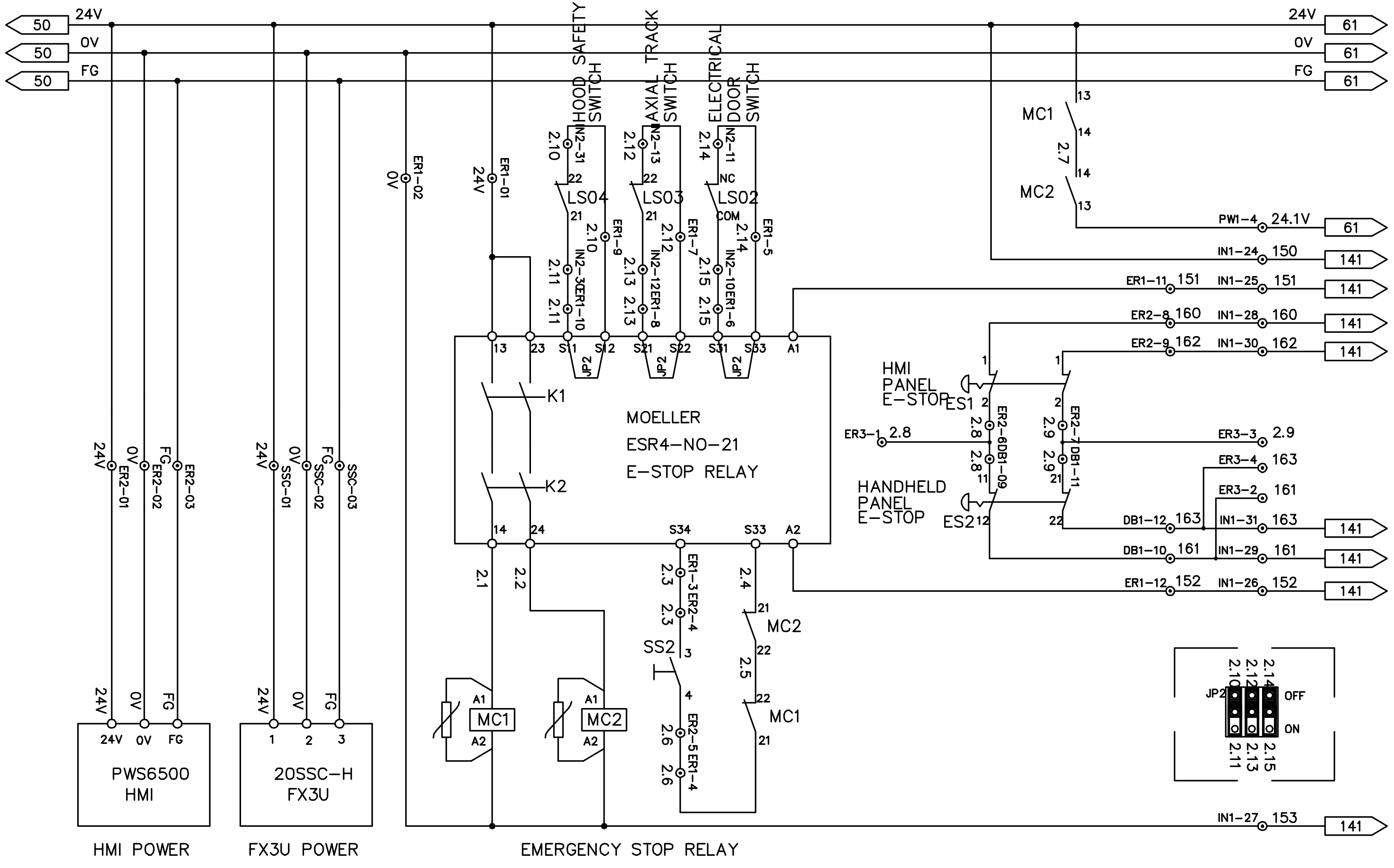

50
24V
0V
FG
61
24.1V
PW1-4
ER2-01
ER2-02
ER2-03
24V 0V FG
PWS6500
HMI
HMI POWER
SSC-01
SSC-02
SSC-03
1 2 3
20SSC-H
FX3U
FX3U POWER
ER1-02
ER1-01
HOOD SAFETY SWITCH
AXIAL TRACK SWITCH
ELECTRICAL DOOR SWITCH
IN2-31
IN2-13
IN2-11
LS04
LS03
LS02
NC
COM
22
21
2.10
2.11
2.12
2.13
2.14
2.15
ER1-9
ER1-7
ER1-5
IN2-3
ER1-10
IN2-12
ER1-8
IN2-10
ER1-6
13
23
S11
S12
S21
S22
S31
S33
A1
JP2
K1
K2
MOELLER
ESR4-NO-21
E-STOP RELAY
14
24
S34
S33
A2
2.1
2.2
2.3
2.4
2.5
2.6
ER1-3
ER2-4
ER2-5
ER1-4
SS2
3
4
MC1
MC2
A1
A2
EMERGENCY STOP RELAY
MC1
13
14
2.7
MC2
IN1-24 150
ER1-11 151
IN1-25 151
ER2-8 160
IN1-28 160
ER2-9 162
IN1-30 162
HMI PANEL E-STOP
ES1
1
2
ER3-1 2.8
2.8
ER2-6
DB1-09
11
12
2.9
ER2-7
DB1-11
21
22
HANDHELD PANEL E-STOP
ES2
ER3-3 2.9
ER3-4 163
ER3-2 161
DB1-12 163
IN1-31 163
DB1-10 161
IN1-29 161
ER1-12 152
IN1-26 152
IN1-27 153
141
JP2
2.10
2.12
2.14
2.11
2.13
2.15
OFF
ON

Main Circuit 2

REBEL 102 SE

DRAWN BY	SCALE: 1:1	DATE: 01-29-09
D. Feltz	DRAWING NO.	REV
CHK'D BY	T998EL00702	-

EDGE Technologies

REV	LOCATION	DESCRIPTION	DATE	INITIALS
-	-	-	-	-

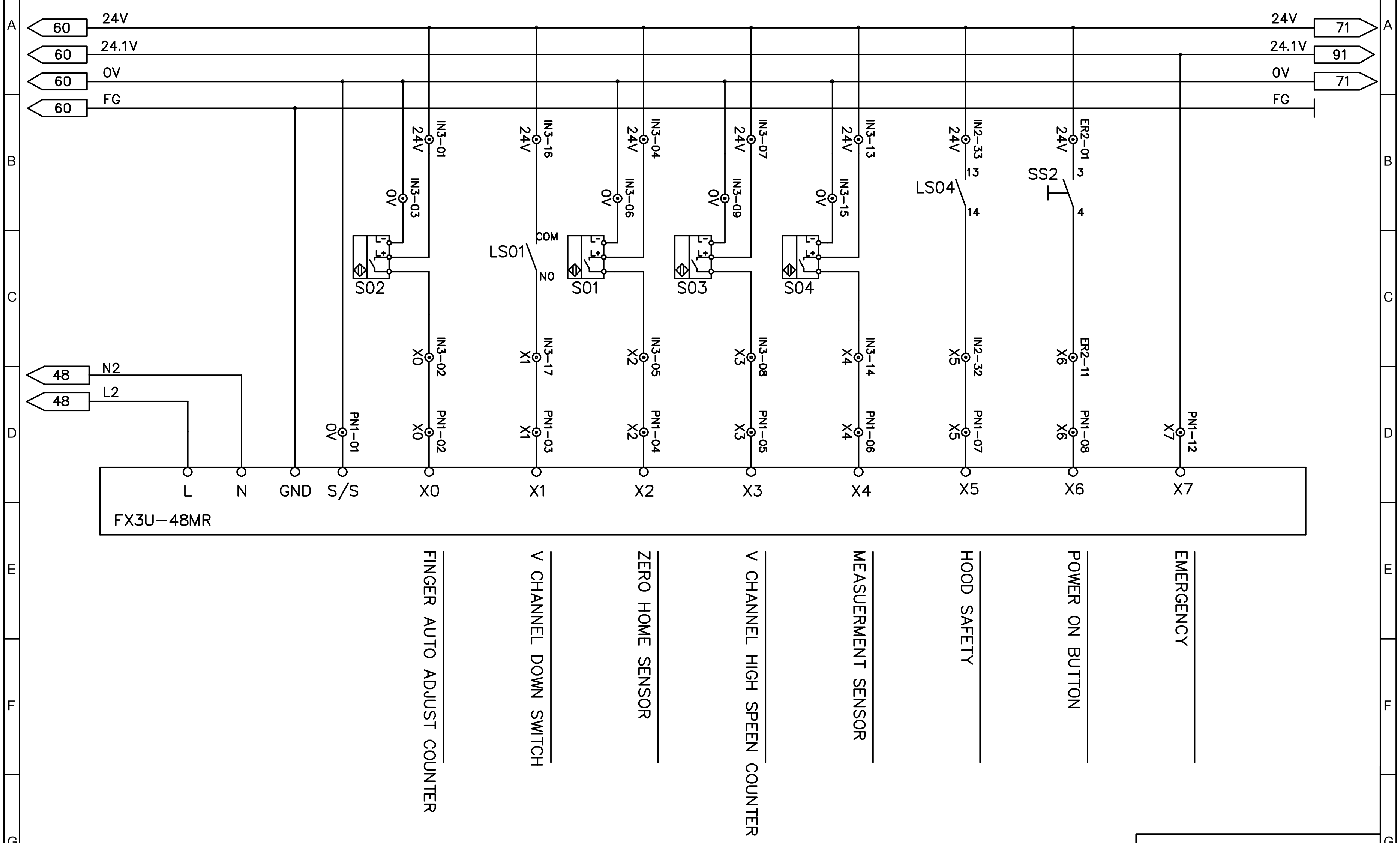

60
24V
60
24.1V
60
0V
60
FG
24V
71
24.1V
91
0V
71
FG
48
N2
48
L2
IN3-01
24V
IN3-03
0V
S02
IN3-16
24V
LS01
COM
NO
IN3-04
24V
IN3-06
0V
S01
IN3-07
24V
IN3-09
0V
S03
IN3-13
24V
IN3-15
0V
S04
IN2-33
24V
13
LS04
14
ER2-01
24V
3
SS2
4
IN3-02
X0
IN3-17
X1
IN3-05
X2
IN3-08
X3
IN3-14
X4
IN2-32
X5
ER2-11
X6
PN1-01
0V
PN1-02
X0
PN1-03
X1
PN1-04
X2
PN1-05
X3
PN1-06
X4
PN1-07
X5
PN1-08
X6
PN1-12
X7
L
N
GND
S/S
X0
X1
X2
X3
X4
X5
X6
X7
FX3U-48MR
FINGER AUTO ADJUST COUNTER
V CHANNEL DOWN SWITCH
ZERO HOME SENSOR
V CHANNEL HIGH SPEEN COUNTER
MEASUERMENT SENSOR
HOOD SAFETY
POWER ON BUTTON
EMERGENCY

EDGE Technologies

PLC Input 1
REBEL 102 SE

DRAWN BY D. Feltz	SCALE: 1:1	DATE: 01-29-09
CHK'D BY	DRAWING NO. T998EL00801	REV -

REV	LOCATION	DESCRIPTION	DATE	INITIALS
-	-	-	-	-

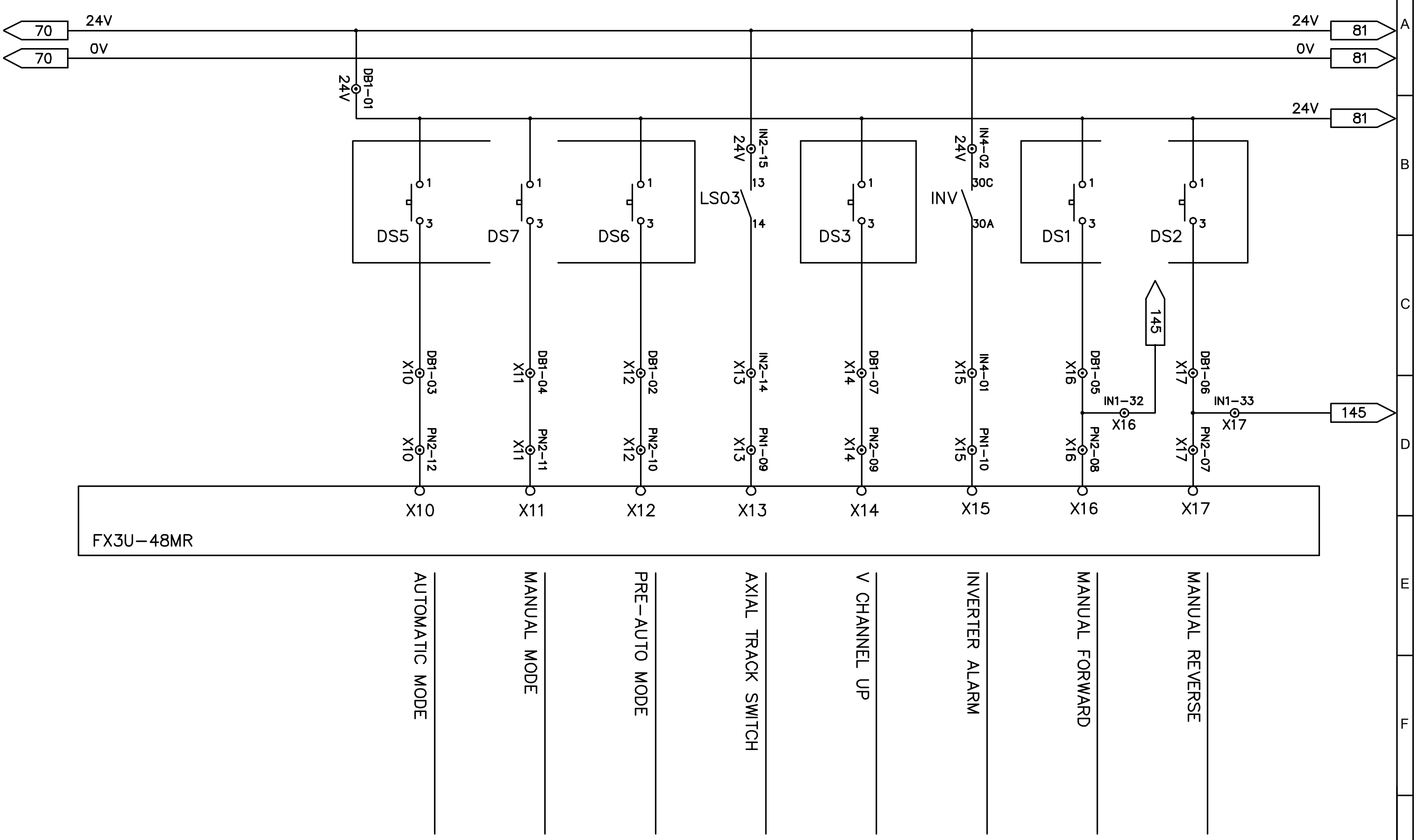

24V
0V
70
70
81
81
81
DB1−01
24V
IN2−15
IN4−02
DS5
DS7
DS6
LS03
13
14
DS3
INV
30C
30A
DS1
DS2
1
3
145
145
DB1−03
DB1−04
DB1−02
IN2−14
DB1−07
IN4−01
DB1−05
DB1−06
IN1−32
IN1−33
PN2−12
PN2−11
PN2−10
PN1−09
PN2−09
PN1−10
PN2−08
PN2−07
X10
X11
X12
X13
X14
X15
X16
X17
FX3U−48MR
AUTOMATIC MODE
MANUAL MODE
PRE−AUTO MODE
AXIAL TRACK SWITCH
V CHANNEL UP
INVERTER ALARM
MANUAL FORWARD
MANUAL REVERSE

EDGE Technologies

PLC Input 2
REBEL 102 SE
DRAWN BY D. Feltz
CHK'D BY
SCALE: 1:1
DATE: 01-29-09
DRAWING NO. T998EL00802
REV -

REV	LOCATION	DESCRIPTION	DATE	INITIALS
-	-	-	-	-

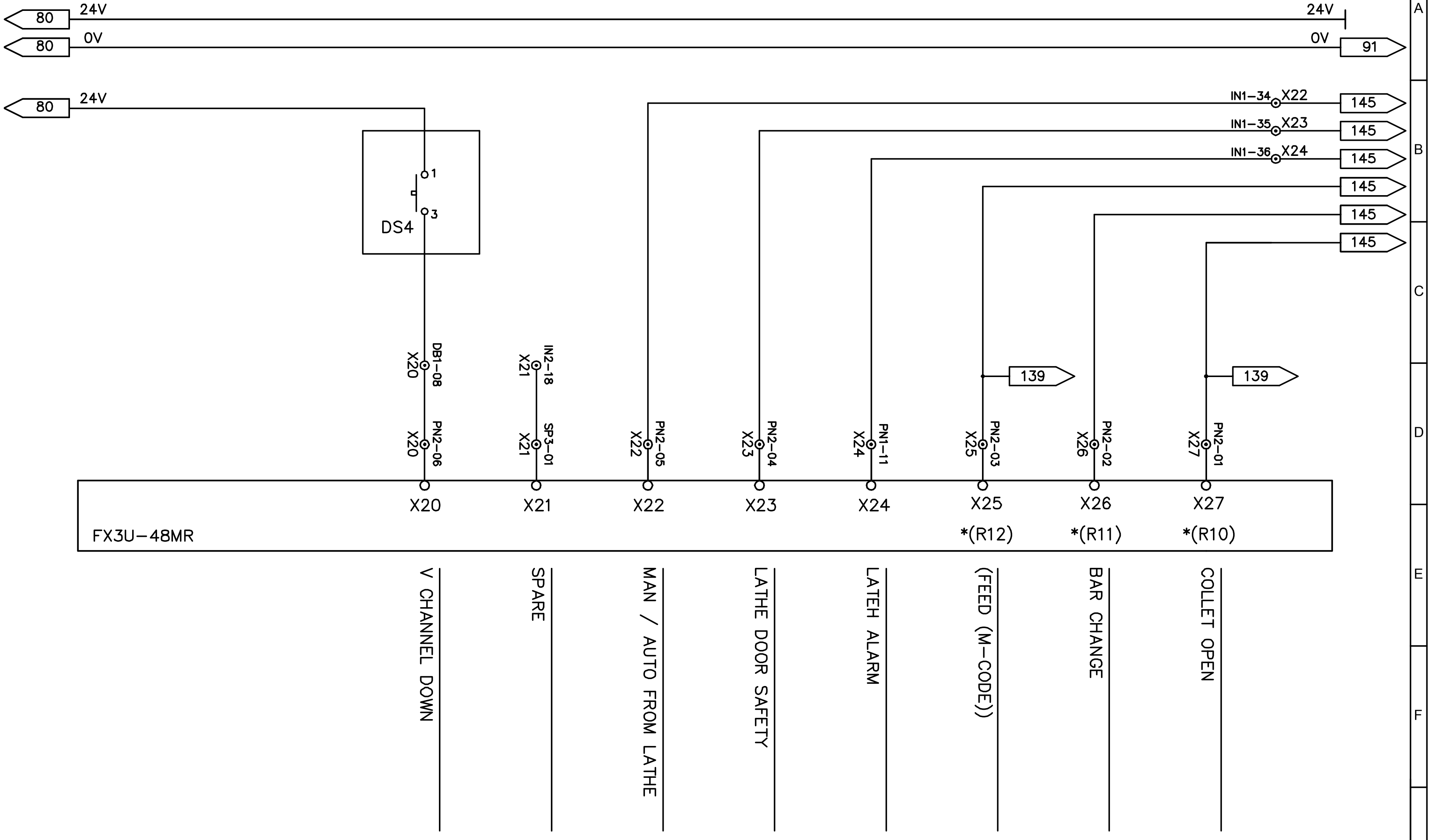
81
82
83
84
85
86
87
88
89
90
A
B
C
D
E
F
G
80
24V
80
0V
80
24V
24V
0V
91
DS4
1
3
DB1−08
X20
PN2−06
X20
IN2−18
X21
SP3−01
X21
PN2−05
X22
PN2−04
X23
PN1−11
X24
PN2−03
X25
PN2−02
X26
PN2−01
X27
139
139
IN1−34
X22
IN1−35
X23
IN1−36
X24
145
145
145
145
145
145
FX3U−48MR
X20
X21
X22
X23
X24
X25
*(R12)
X26
*(R11)
X27
*(R10)
V CHANNEL DOWN
SPARE
MAN / AUTO FROM LATHE
LATHE DOOR SAFETY
LATEH ALARM
(FEED (M−CODE))
BAR CHANGE
COLLET OPEN

EDGE Technologies

PLC Input 3
REBEL 102 SE
DRAWN BY D. Feltz
CHK'D BY
SCALE: 1:1
DATE: 01-29-09
DRAWING NO. T998EL00803
REV -

REV	LOCATION	DESCRIPTION	DATE	INITIALS
-	-	-	-	-

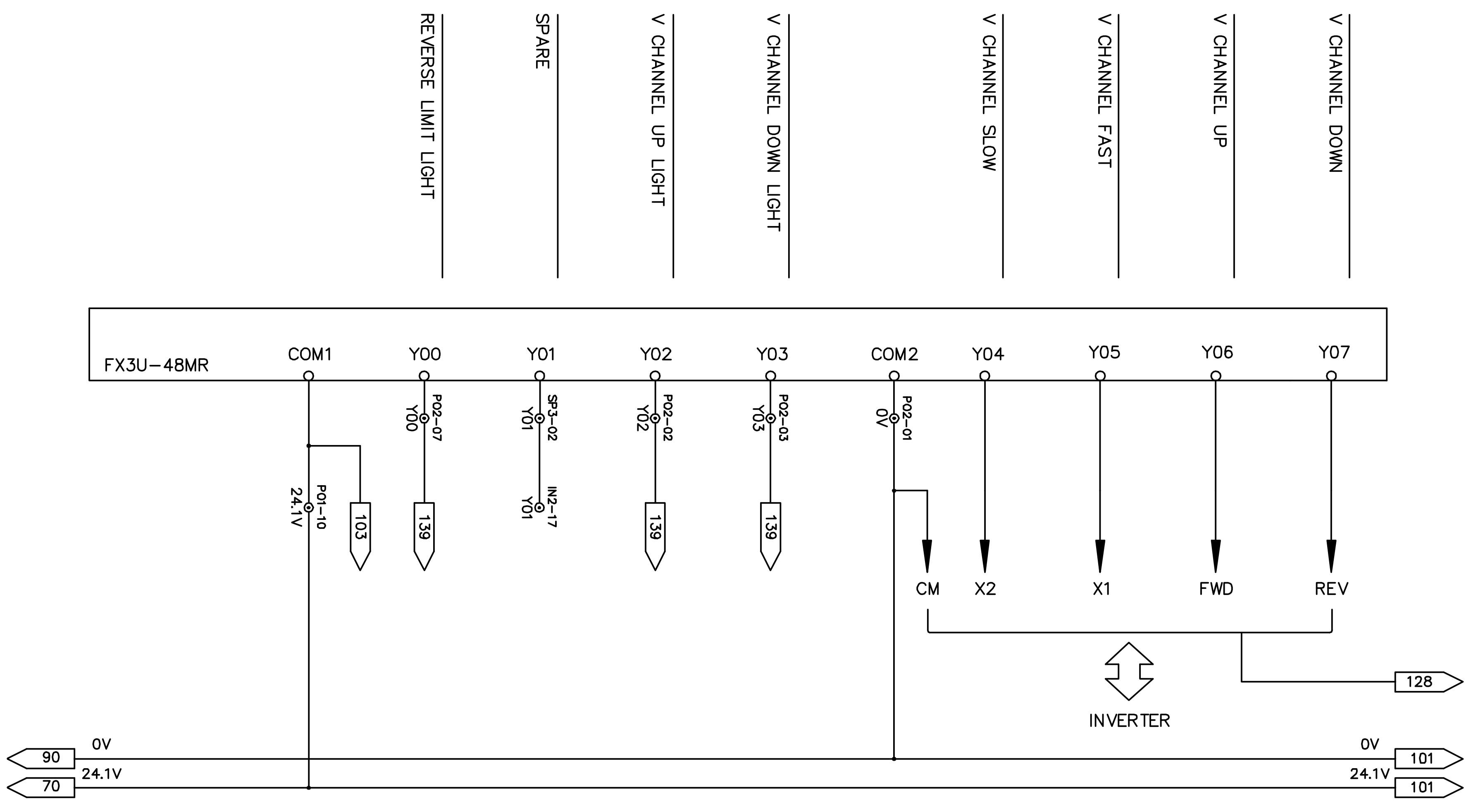
91
92
93
94
95
96
97
98
99
100
A
B
C
D
E
F
G
REVERSE LIMIT LIGHT
SPARE
V CHANNEL UP LIGHT
V CHANNEL DOWN LIGHT
V CHANNEL SLOW
V CHANNEL FAST
V CHANNEL UP
V CHANNEL DOWN
FX3U−48MR
COM1
Y00
Y01
Y02
Y03
COM2
Y04
Y05
Y06
Y07
P01−10
24.1V
103
P02−07
Y00
139
SP3−02
Y01
IN2−17
Y01
P02−02
Y02
139
P02−03
Y03
139
P02−01
0V
CM
X2
X1
FWD
REV
128
INVERTER
90
0V
70
24.1V
0V
101
24.1V
101

EDGE Technologies

PLC Output 1
REBEL 102 SE
DRAWN BY D. Feltz
CHK'D BY
SCALE: 1:1
DATE: 01-29-09
DRAWING NO. T998EL00901
REV -

REV	LOCATION	DESCRIPTION	DATE	INITIALS
-	-	-	-	-

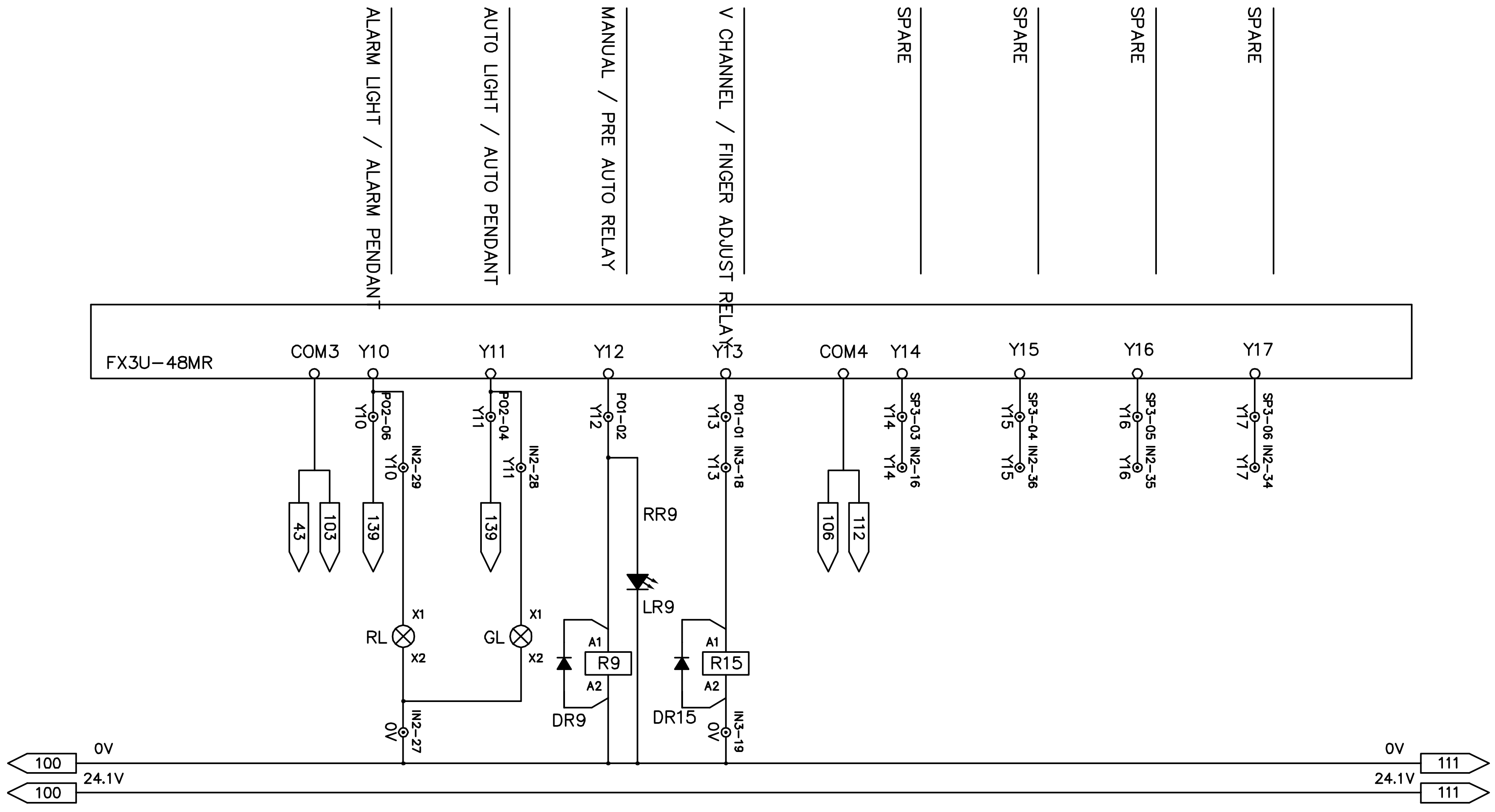
ALARM LIGHT / ALARM PENDANT
AUTO LIGHT / AUTO PENDANT
MANUAL / PRE AUTO RELAY
V CHANNEL / FINGER ADJUST RELAY
SPARE
SPARE
SPARE
SPARE
FX3U−48MR
COM3
Y10
Y11
Y12
Y13
COM4
Y14
Y15
Y16
Y17
P02−06
Y10
IN2−29
Y10
P02−04
Y11
IN2−28
Y11
P01−02
Y12
P01−01
Y13
IN3−18
Y13
SP3−03
Y14
IN2−16
Y14
SP3−04
Y15
IN2−36
Y15
SP3−05
Y16
IN2−35
Y16
SP3−06
Y17
IN2−34
Y17
43
103
139
139
106
112
RR9
LR9
X1
RL
X2
X1
GL
X2
A1
R9
A2
DR9
A1
R15
A2
DR15
IN2−27
0V
IN3−19
0V
0V
100
24.1V
100
0V
111
24.1V
111

PLC Output 2
REBEL 102 SE

DRAWN BY D. Feltz
CHK'D BY
SCALE: 1:1
DATE: 01-29-09
DRAWING NO. T998EL00902
REV -

EDGE Technologies

REV	LOCATION	DESCRIPTION	DATE	INITIALS
-	-	-	-	-

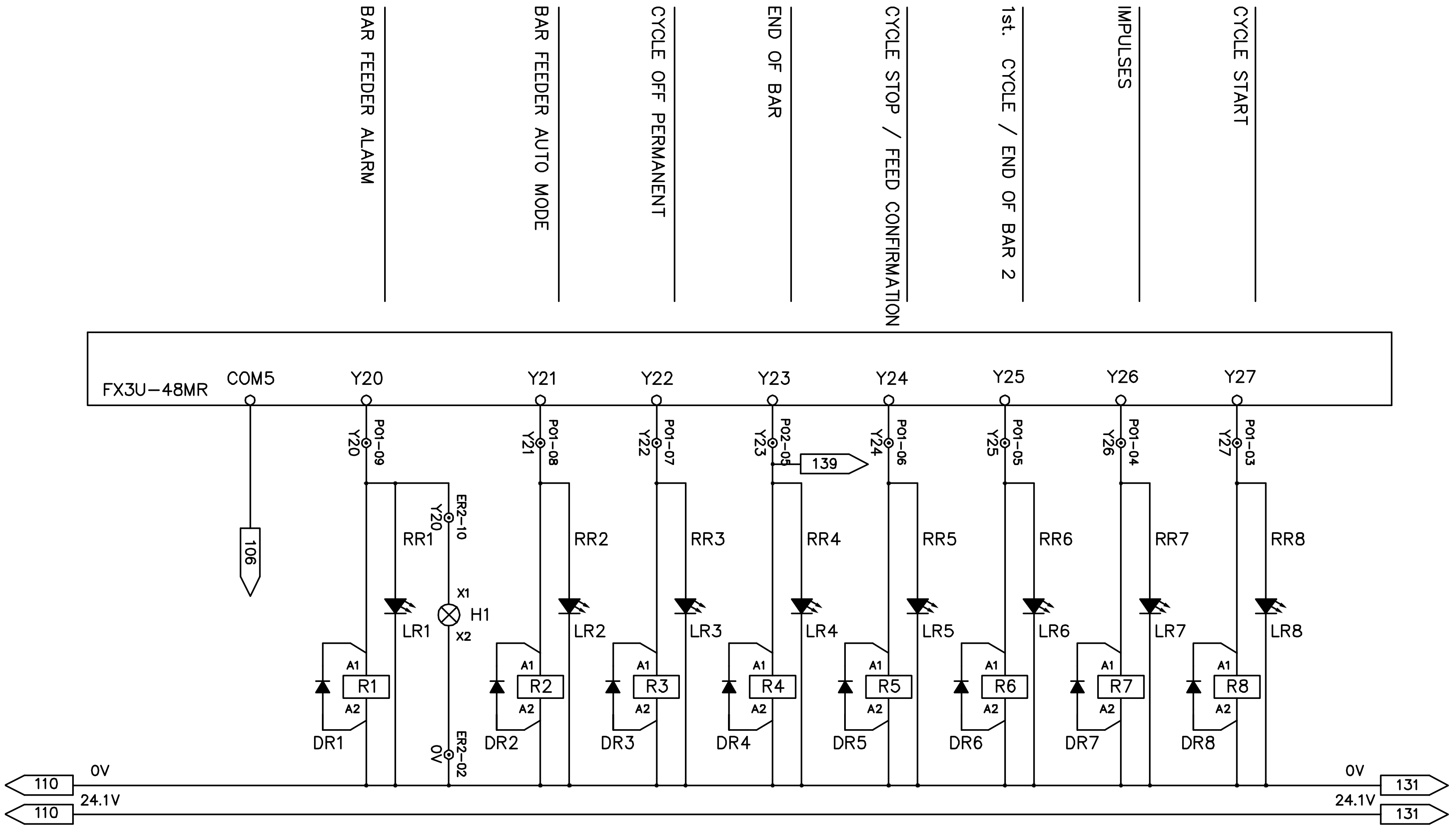
BAR FEEDER ALARM
BAR FEEDER AUTO MODE
CYCLE OFF PERMANENT
END OF BAR
CYCLE STOP / FEED CONFIRMATION
1st. CYCLE / END OF BAR 2
IMPULSES
CYCLE START
FX3U–48MR
COM5
Y20
Y21
Y22
Y23
Y24
Y25
Y26
Y27
106
P01–09
P01–08
P01–07
P02–05
P01–06
P01–05
P01–04
P01–03
139
ER2–10
ER2–02
X1
X2
H1
RR1
RR2
RR3
RR4
RR5
RR6
RR7
RR8
LR1
LR2
LR3
LR4
LR5
LR6
LR7
LR8
A1
A2
R1
R2
R3
R4
R5
R6
R7
R8
DR1
DR2
DR3
DR4
DR5
DR6
DR7
DR8
0V
24.1V
110
131

EDGE Technologies

PLC Output 3
REBEL 102 SE

DRAWN BY	SCALE: 1:1	DATE: 01-29-09
D. Feltz	DRAWING NO.	REV
CHK'D BY	T998EL00903	-

REV	LOCATION	DESCRIPTION	DATE	INITIALS
-	-	-	-	-

INVERTER PARAMETER SETUP:

1. SETTING VALUE OF THE PARAMETER F02 = 1
2. SETTING VALUE OF THE PARAMETER F05 = 220
3. SETTING VALUE OF THE PARAMETER F06 = 220
4. SETTING VALUE OF THE PARAMETER F07 = 1
5. SETTING VALUE OF THE PARAMETER F08 = 0.1
6. SETTING VALUE OF THE PARAMETER F26 = 15
7. SETTING VALUE OF THE PARAMETER E02 = 1
8. SETTING VALUE OF THE PARAMETER C05 = 35.0
9. SETTING VALUE OF THE PARAMETER C06 = 6
10. SETTING VALUE OF THE PARAMETER P03 = 3.0

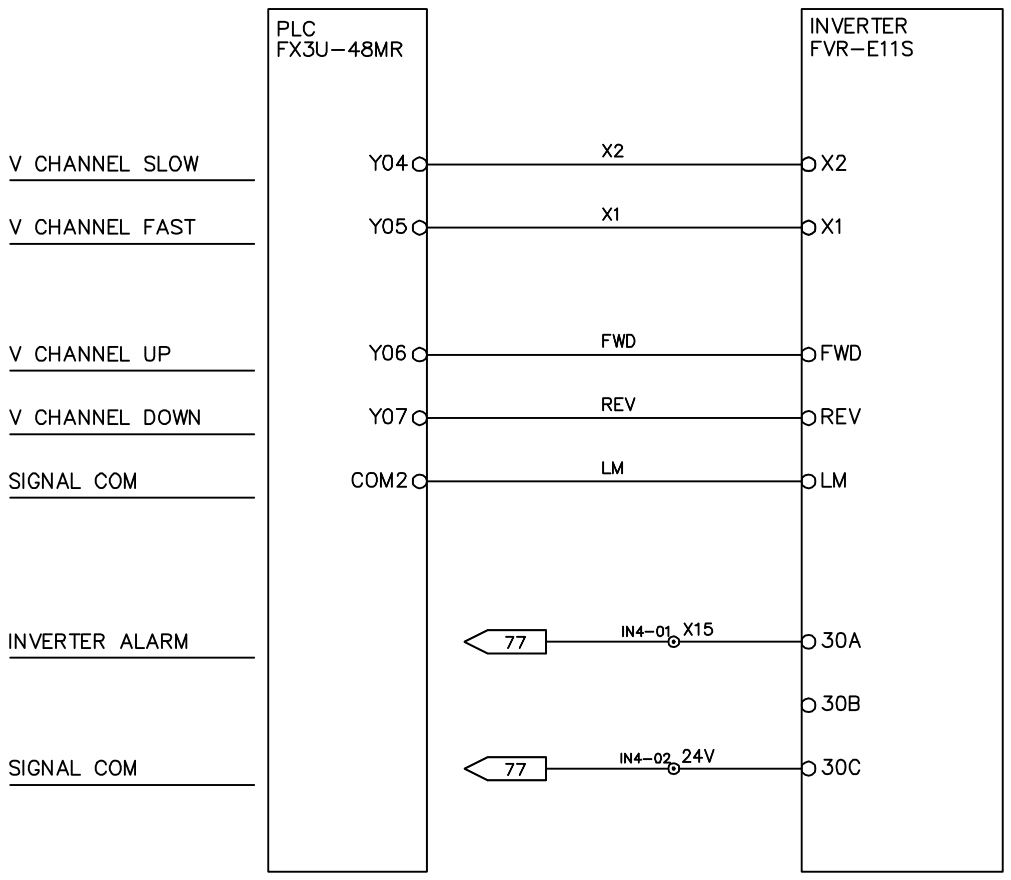
V CHANNEL SLOW
V CHANNEL FAST
V CHANNEL UP
V CHANNEL DOWN
SIGNAL COM
INVERTER ALARM
SIGNAL COM
PLC
FX3U-48MR
Y04
Y05
Y06
Y07
COM2
X2
X1
FWD
REV
LM
77
IN4-01
X15
77
IN4-02
24V
INVERTER
FVR-E11S
X2
X1
FWD
REV
LM
30A
30B
30C

EDGE Technologies

Inverter Circuit

REBEL 102 SE

DRAWN BY D. Feltz	SCALE: 1:1	DATE: 01-29-09
CHK'D BY	DRAWING NO. T998EL01701	REV -

REV	LOCATION	DESCRIPTION	DATE	INITIALS
-	-	-	-	-

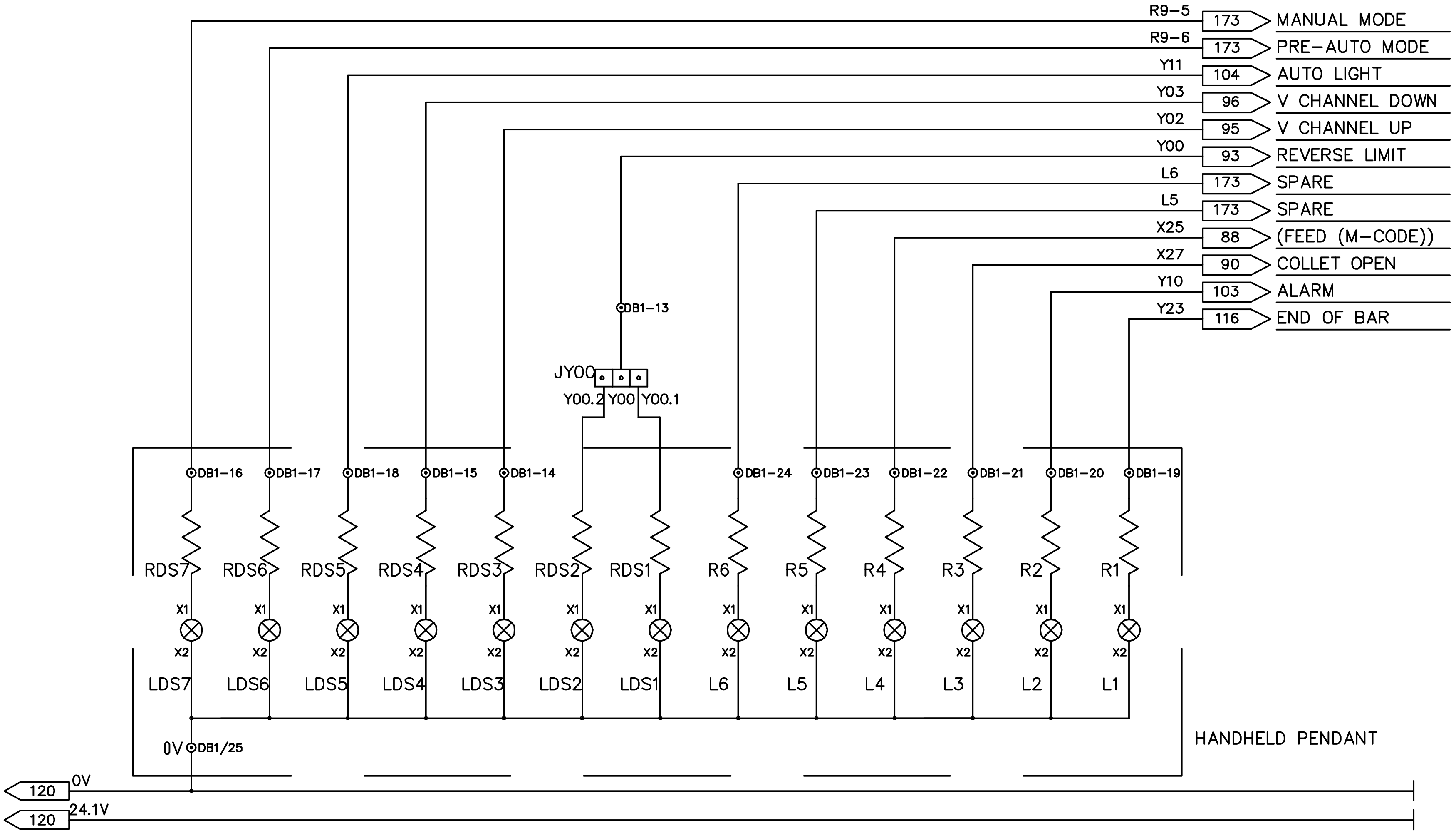
R9-5
173
MANUAL MODE
R9-6
173
PRE-AUTO MODE
Y11
104
AUTO LIGHT
Y03
96
V CHANNEL DOWN
Y02
95
V CHANNEL UP
Y00
93
REVERSE LIMIT
L6
173
SPARE
L5
173
SPARE
X25
88
(FEED (M-CODE))
X27
90
COLLET OPEN
Y10
103
ALARM
Y23
116
END OF BAR
DB1-13
JY00
Y00.2
Y00
Y00.1
DB1-16
DB1-17
DB1-18
DB1-15
DB1-14
DB1-24
DB1-23
DB1-22
DB1-21
DB1-20
DB1-19
RDS7
RDS6
RDS5
RDS4
RDS3
RDS2
RDS1
R6
R5
R4
R3
R2
R1
X1
X2
LDS7
LDS6
LDS5
LDS4
LDS3
LDS2
LDS1
L6
L5
L4
L3
L2
L1
0V
DB1/25
HANDHELD PENDANT
120
0V
120
24.1V

EDGE Technologies

Pendant LED Circuit REBEL 102 SE	
DRAWN BY D. Feltz	SCALE: 1:1
	DATE: 01-29-09
CHK'D BY	DRAWING NO. T998EL00100
	REV -

REV	LOCATION	DESCRIPTION	DATE	INITIALS
-	-	-	-	-

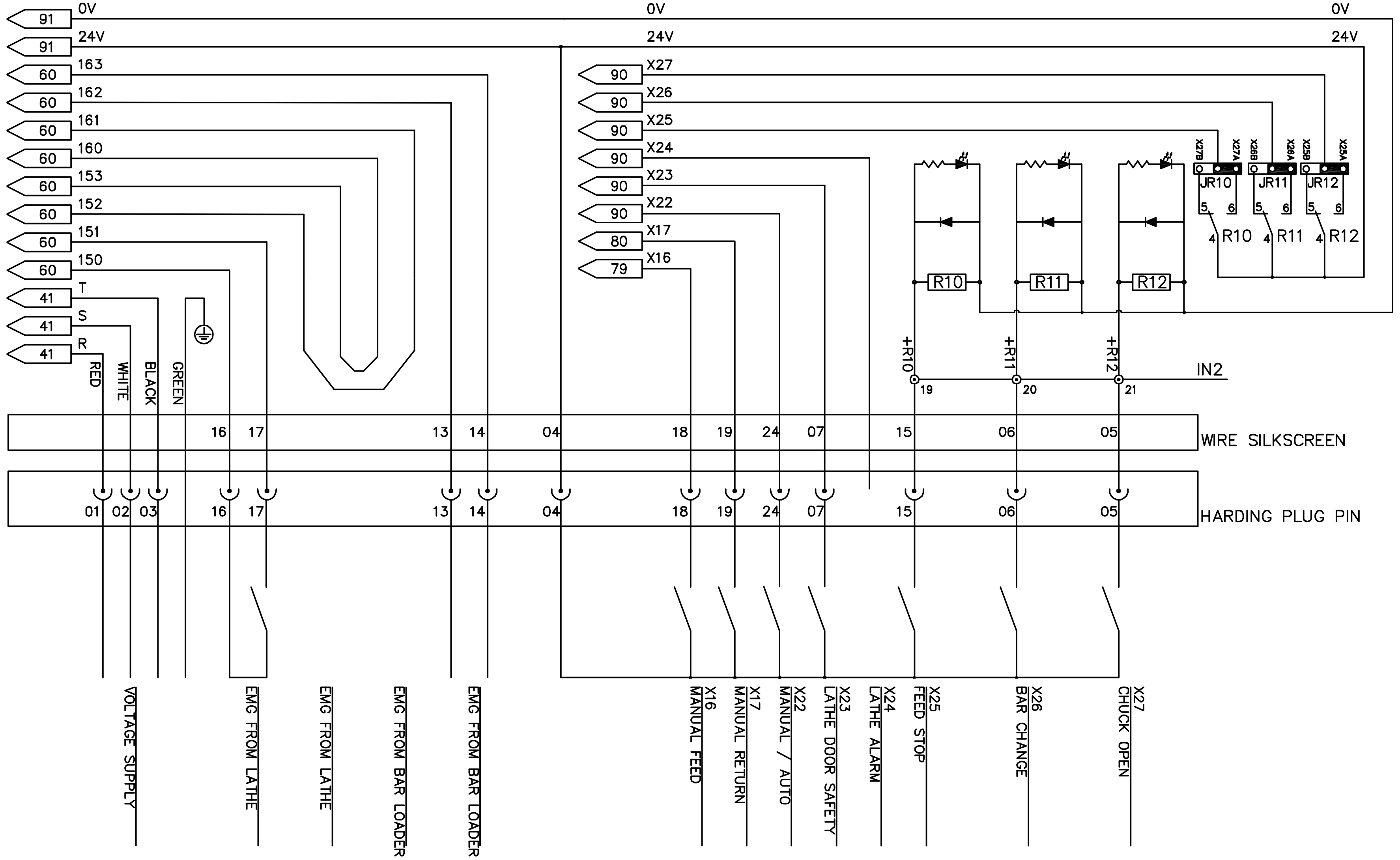
141
142
143
144
145
146
147
148
149
150
A
B
C
D
E
F
G
91
0V
91
24V
60
163
60
162
60
161
60
160
60
153
60
152
60
151
60
150
41
T
41
S
41
R
RED
WHITE
BLACK
GREEN
90
X27
90
X26
90
X25
90
X24
90
X23
90
X22
80
X17
79
X16
0V
24V
X27B
X27A
X26B
X26A
X25B
X25A
JR10
JR11
JR12
5
6
4
R10
R11
R12
+R10
+R11
+R12
19
20
21
IN2
16
17
13
14
04
18
19
24
07
15
06
05
WIRE SILKSCREEN
01
02
03
HARDING PLUG PIN
VOLTAGE SUPPLY
EMG FROM LATHE
EMG FROM LATHE
EMG FROM BAR LOADER
EMG FROM BAR LOADER
X16
MANUAL FEED
X17
MANUAL RETURN
X22
MANUAL / AUTO
X23
LATHE DOOR SAFETY
X24
LATHE ALARM
X25
FEED STOP
X26
BAR CHANGE
X27
CHUCK OPEN

EDGE Technologies

Interface Input Signals
REBEL 102 SE

DRAWN BY D. Feltz	SCALE: 1:1	DATE: 01-29-09
CHK'D BY	DRAWING NO. T998EL01401	REV -

REV	LOCATION	DESCRIPTION	DATE	INITIALS
-	-	-	-	-

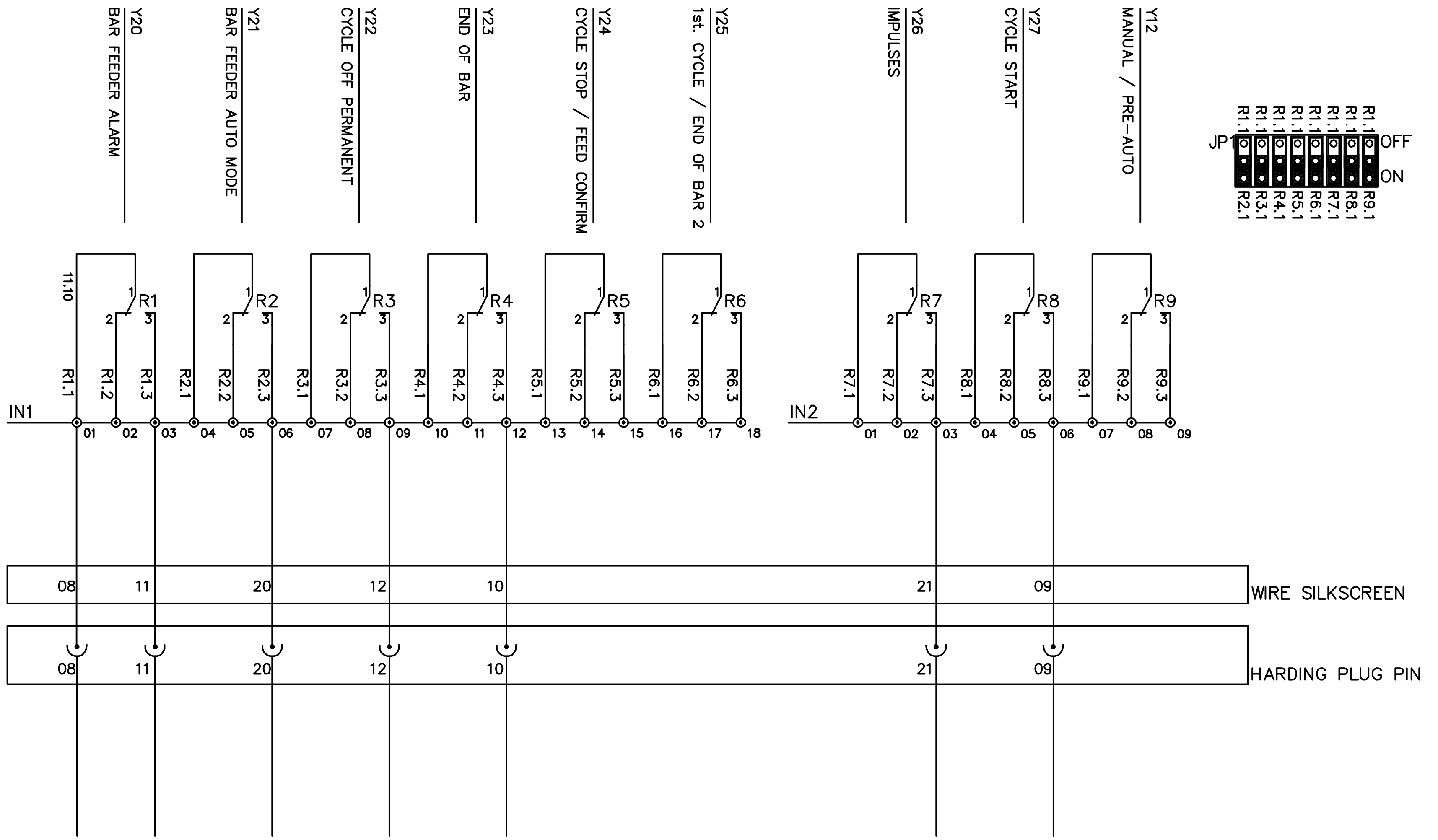
Y20
BAR FEEDER ALARM
Y21
BAR FEEDER AUTO MODE
Y22
CYCLE OFF PERMANENT
Y23
END OF BAR
Y24
CYCLE STOP / FEED CONFIRM
Y25
1st. CYCLE / END OF BAR 2
Y26
IMPULSES
Y27
CYCLE START
Y12
MANUAL / PRE-AUTO
JP1
R1.1
R2.1
R3.1
R4.1
R5.1
R6.1
R7.1
R8.1
R9.1
OFF
ON
11.10
R1
R2
R3
R4
R5
R6
R7
R8
R9
1
2
3
R1.1
R1.2
R1.3
R2.1
R2.2
R2.3
R3.1
R3.2
R3.3
R4.1
R4.2
R4.3
R5.1
R5.2
R5.3
R6.1
R6.2
R6.3
R7.1
R7.2
R7.3
R8.1
R8.2
R8.3
R9.1
R9.2
R9.3
IN1
01
02
03
04
05
06
07
08
09
10
11
12
13
14
15
16
17
18
IN2
01
02
03
04
05
06
07
08
09
08
11
20
12
10
21
09
WIRE SILKSCREEN
08
11
20
12
10
21
09
HARDING PLUG PIN
151
152
153
154
155
156
157
158
159
160
A
B
C
D
E
F
G

EDGE Technologies

Interface Ouput Signals
REBEL 102 SE

DRAWN BY	SCALE: 1:1	DATE: 01-29-09
D. Feltz	DRAWING NO.	REV
CHK'D BY	T998EL01402	-

REV	LOCATION	DESCRIPTION	DATE	INITIALS
-	-	-	-	-

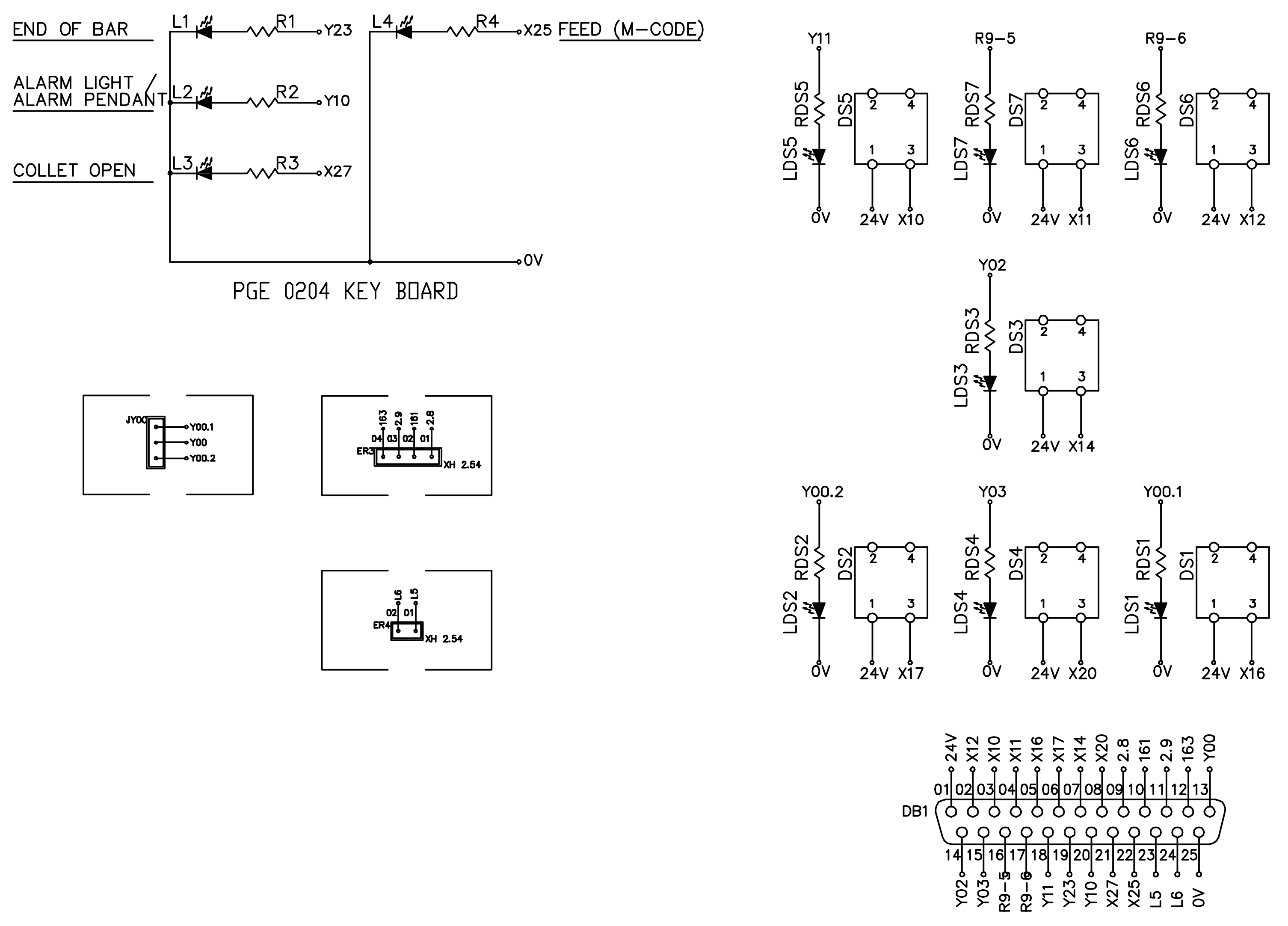

END OF BAR
ALARM LIGHT / ALARM PENDANT
COLLET OPEN
L1
L2
L3
L4
R1
R2
R3
R4
Y23
Y10
X27
X25
FEED (M-CODE)
0V
PGE 0204 KEY BOARD
JY00
Y00.1
Y00
Y00.2
ER3
04 03 02 01
163 2.9 161 2.8
XH 2.54
ER4
02 01
L6 L5
XH 2.54
Y11
RDS5
LDS5
DS5
R9-5
RDS7
LDS7
DS7
R9-6
RDS6
LDS6
DS6
24V X10
24V X11
24V X12
Y02
RDS3
LDS3
DS3
24V X14
Y00.2
RDS2
LDS2
DS2
24V X17
Y03
RDS4
LDS4
DS4
24V X20
Y00.1
RDS1
LDS1
DS1
24V X16
1 2 3 4
DB1
01 24V
02 X12
03 X10
04 X11
05 X16
06 X17
07 X14
08 X20
09 2.8
10 161
11 2.9
12 163
13 Y00
14 Y02
15 Y03
16 R9-5
17 R9-6
18 Y11
19 Y23
20 Y10
21 X27
22 X25
23 L5
24 L6
25 0V

EDGE Technologies

PC Board Circuit of Pendant LED
REBEL 102 SE

DRAWN BY	SCALE: 1:1	DATE: 01-29-09
D. Feltz	DRAWING NO.	REV
CHK'D BY	T998EL01201	-

REV	LOCATION	DESCRIPTION	DATE	INITIALS
-	-	-	-	-

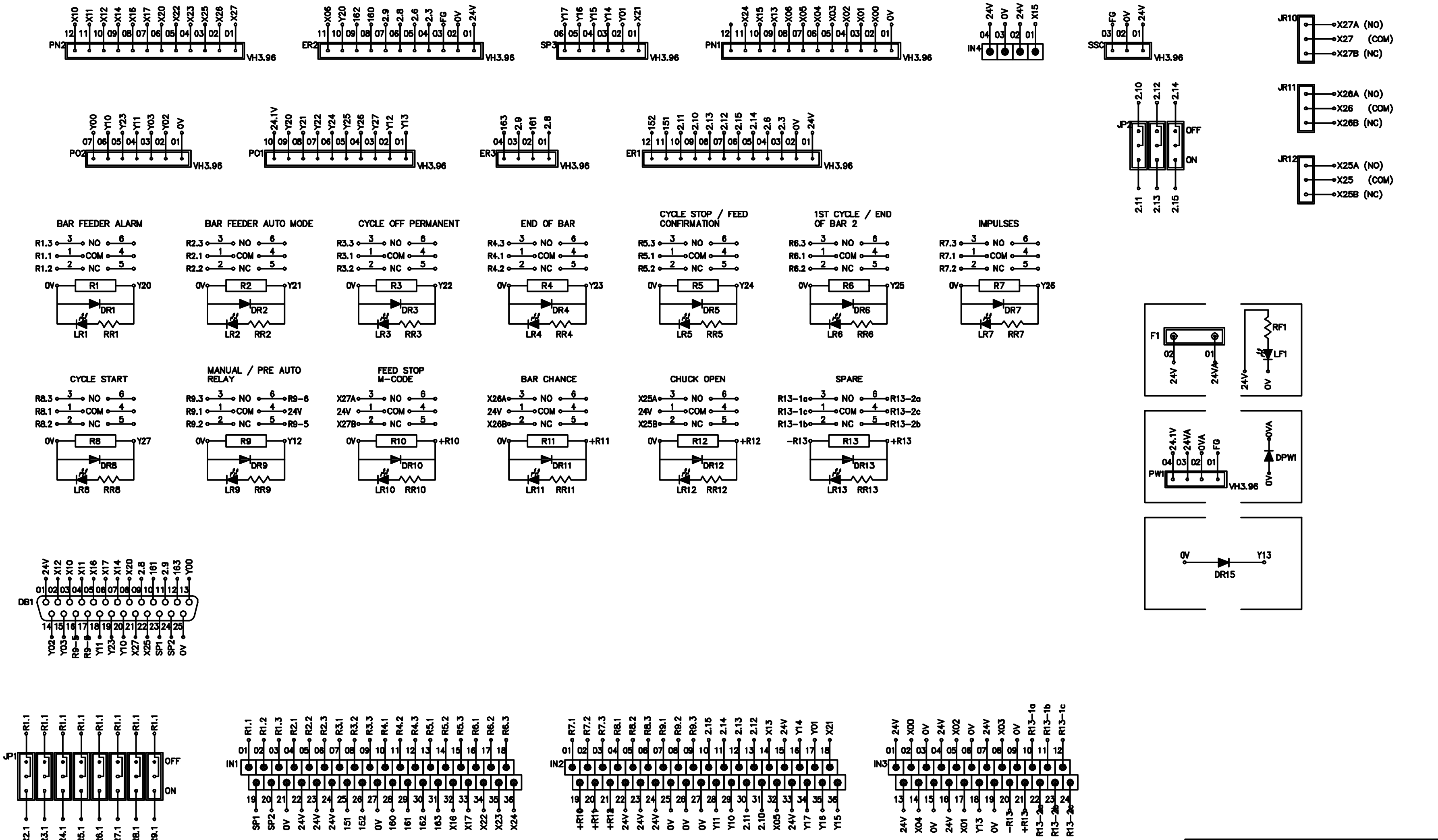

PN2
ER2
SP3
PN1
IN4
SSC
PO2
PO1
ER3
ER1
JP2
JR10
JR11
JR12
X27A (NO)
X27 (COM)
X27B (NC)
X26A (NO)
X26 (COM)
X26B (NC)
X25A (NO)
X25 (COM)
X25B (NC)
VH3.96
BAR FEEDER ALARM
BAR FEEDER AUTO MODE
CYCLE OFF PERMANENT
END OF BAR
CYCLE STOP / FEED CONFIRMATION
1ST CYCLE / END OF BAR 2
IMPULSES
CYCLE START
MANUAL / PRE AUTO RELAY
FEED STOP M-CODE
BAR CHANCE
CHUCK OPEN
SPARE
NO
COM
NC
F1
RF1
LF1
PW1
DPW1
DR15
DB1
JP1
IN1
IN2
IN3
OFF
ON

EDGE Technologies

Main PC Board Circuit 1

REBEL 102 SE

DRAWN BY	SCALE: 1:1	DATE: 01-29-09
D. Feltz	DRAWING NO.	REV
CHK'D BY	T998EL01301	-

13. Replacement Parts

Replacement parts for your Rebel 102SE are available from our St. Louis facility. Please have your serial number available when calling. Our phone number is (314) 692-8388, please follow the prompts to reach the parts department.

13.1 Electrical Components

See the first and second pages of the electrical schematic for component locations

Function	Part Number	Code
Bar Feeder Components		
Alarm & Auto Lamp	J630101	HL1
Zero Home Sensor	J310302	S01
Servo Motor	J220802	M1
Power On Switch	J310795	SS2
Human Machine Interface	J210504	HMI
Emergency Stop	J310704	ES1
V Channel Down Limit Switch	J310406 & J631600	LS01
Electrical Door Switch	J310406 & J631600	LS02
Axial Track Switch	J311802	LS03
Finger Adjust Motor	T16380600 + T16380700	M3
Finger Adjust Counter Switch	J310302	S02
Main Switch	J310502	SS1
V Channel Hi-Speed Counter	J310302	S03
V Channel Up/Down Motor	T16321000	M2
Handheld Pendant	J511710	Pendant
Measurement Sensor	J310302	S04
Hood Safety Switch	J310411	LS04
Electrical Cabinet Components		
Main PC Relay Board	J630101	MPCB
Filter	J220405	FIL

Power Supply	J230100	PS
Electrical Cabinet Components (continued)		
Inverter	J220700	INV
FG	J631202	FG
Programmable Logic Control	J210700	PLC
Motion Module	J220202	20SSC-H
Relay & Pedestal	J310203 + J310211	R15
Emergency Stop Relay	J310704	E-Stop
Circuit Protection	J310505	CP1
Circuit Protection	J310505	CP2
No Fuse Breaker	J310504	NFB1
Magnetic Contactor	J312704	MC1
Magnetic Contactor	J312704	MC2

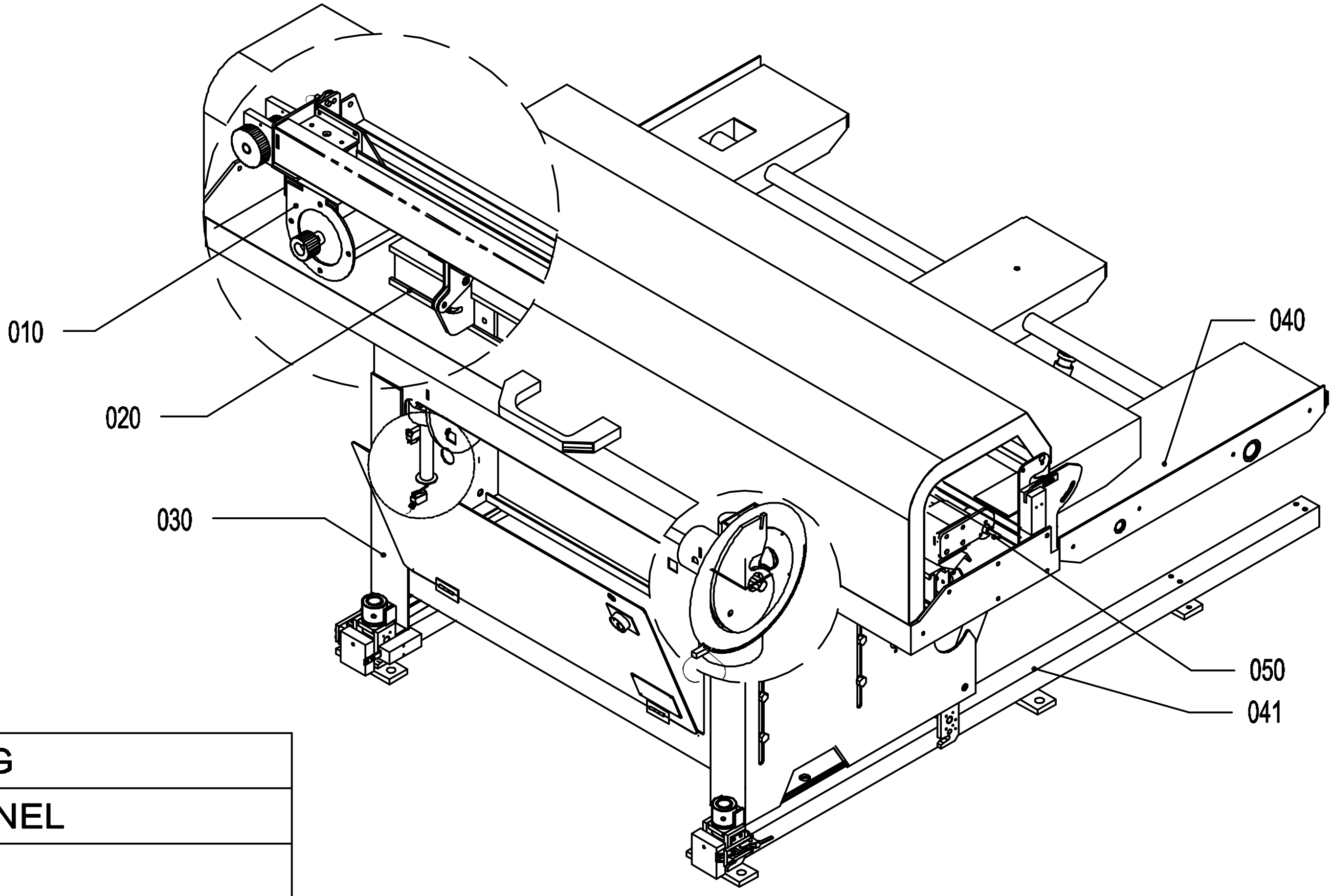
010
020
030
040
050
041

010	FEEDING
020	V CHANNEL
030	CAM
040	FRAME DEVICE
041	AXIAL DISPLACEMENT
050	PUSH BAR

Rebel 102 SE

PICTURE INDEX

Tab. 000 1

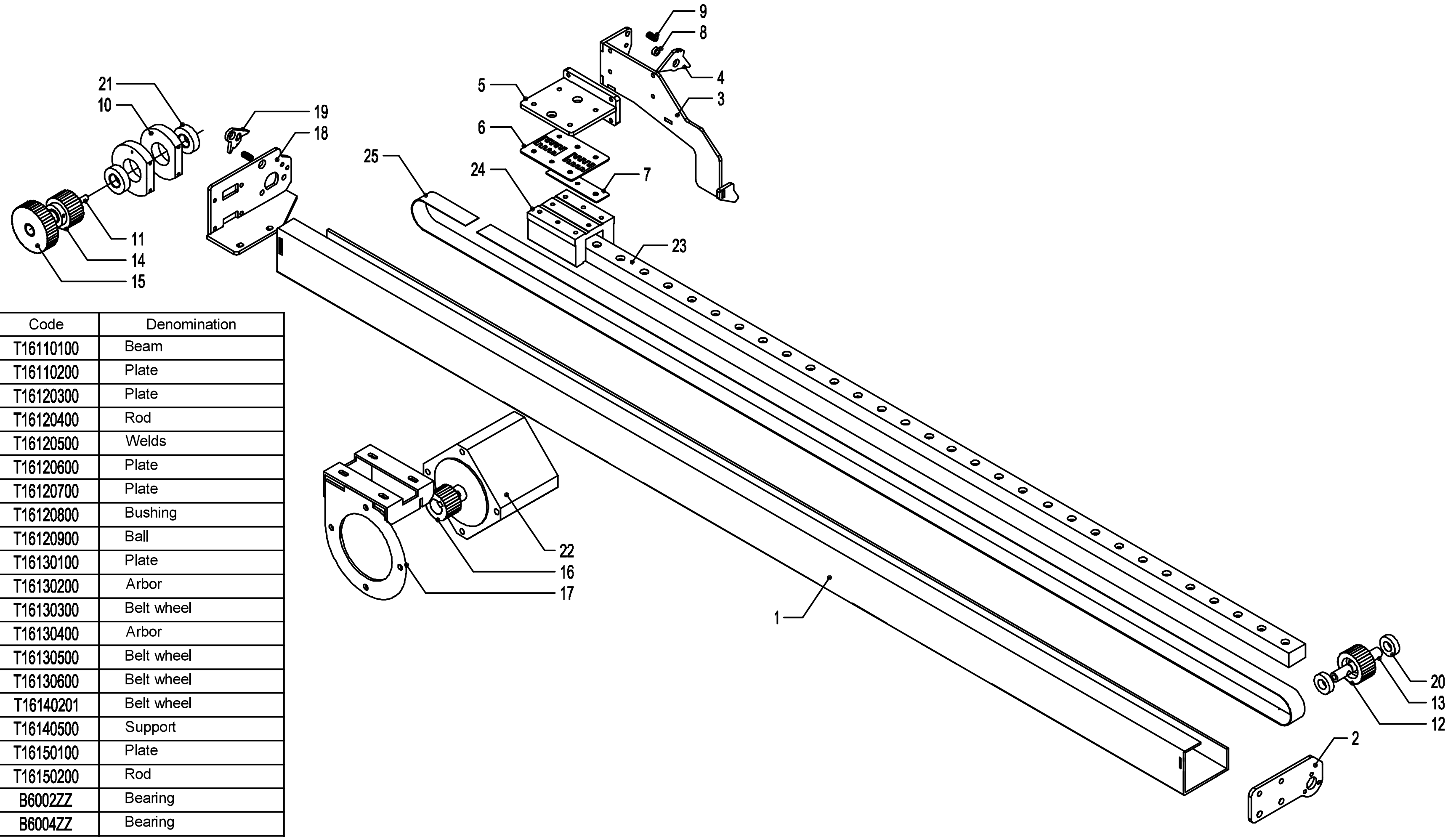

N.	Code	Denomination
1	T16110100	Beam
2	T16110200	Plate
3	T16120300	Plate
4	T16120400	Rod
5	T16120500	Welds
6	T16120600	Plate
7	T16120700	Plate
8	T16120800	Bushing
9	T16120900	Ball
10	T16130100	Plate
11	T16130200	Arbor
12	T16130300	Belt wheel
13	T16130400	Arbor
14	T16130500	Belt wheel
15	T16130600	Belt wheel
16	T16140201	Belt wheel
17	T16140500	Support
18	T16150100	Plate
19	T16150200	Rod
20	B6002ZZ	Bearing
21	B6004ZZ	Bearing
22	J220402	Servo
23	T16110500	Clamp base
24	T16121000	Anchor
25	T16140300	Belt

Rebel 102 SE

FEEDING

Tab. 010 1

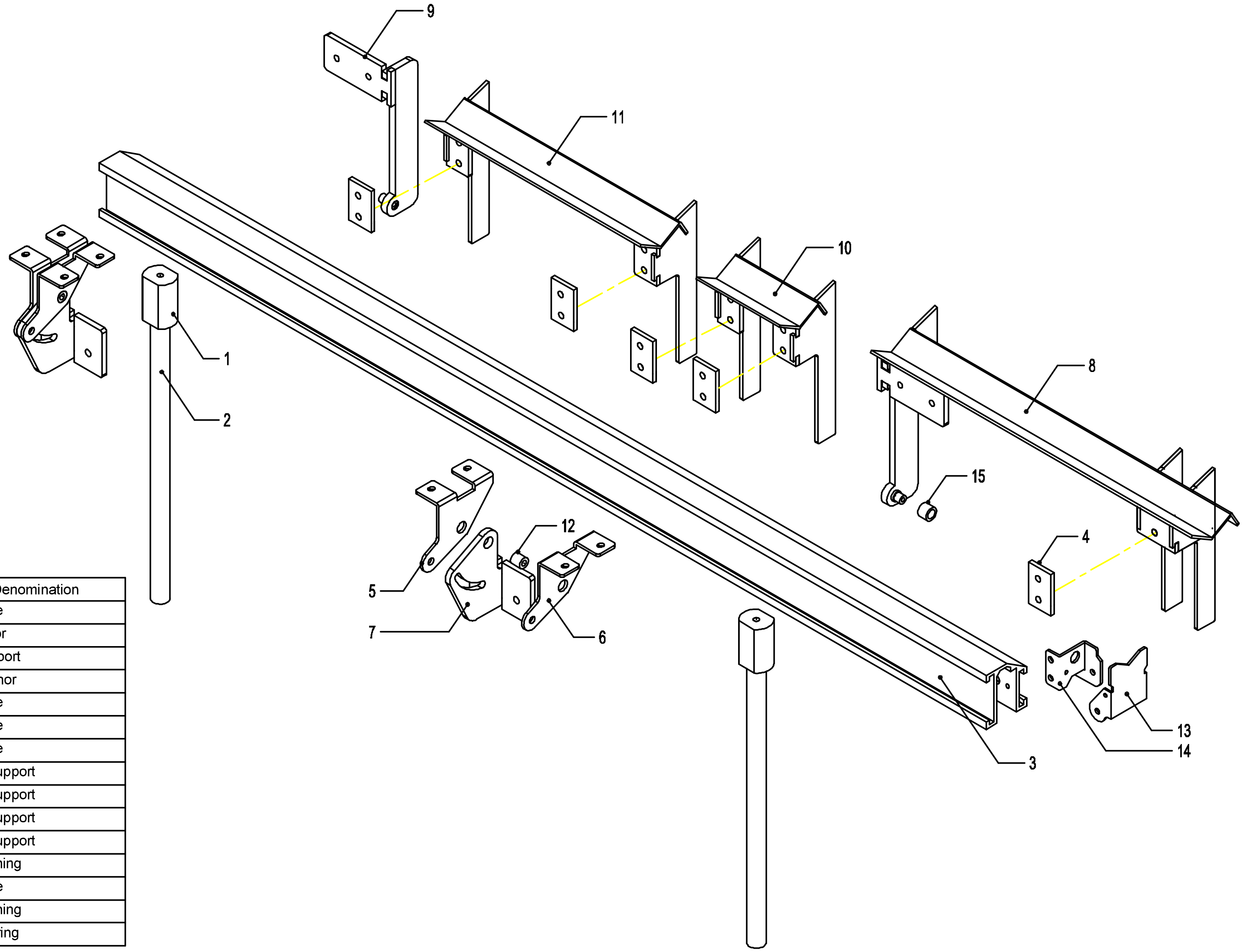

N.	Code	Denomination
1	T16210101	Plate
2	T16210102	Arbor
3	T16210200	Support
4	T16210400	Anchor
5	T16210500	Plate
6	T16210501	Plate
7	T16210600	Plate
8	T16210720	V-Support
9	T16210800	V-Support
10	T16210900	V-Support
11	T16211000	V-Support
12	T16211100	Bushing
13	T16220100	Plate
14	T16220200	Bushing
15	B6201	Bearing

Rebel 102 SE

V CHANNEL

020

020 1

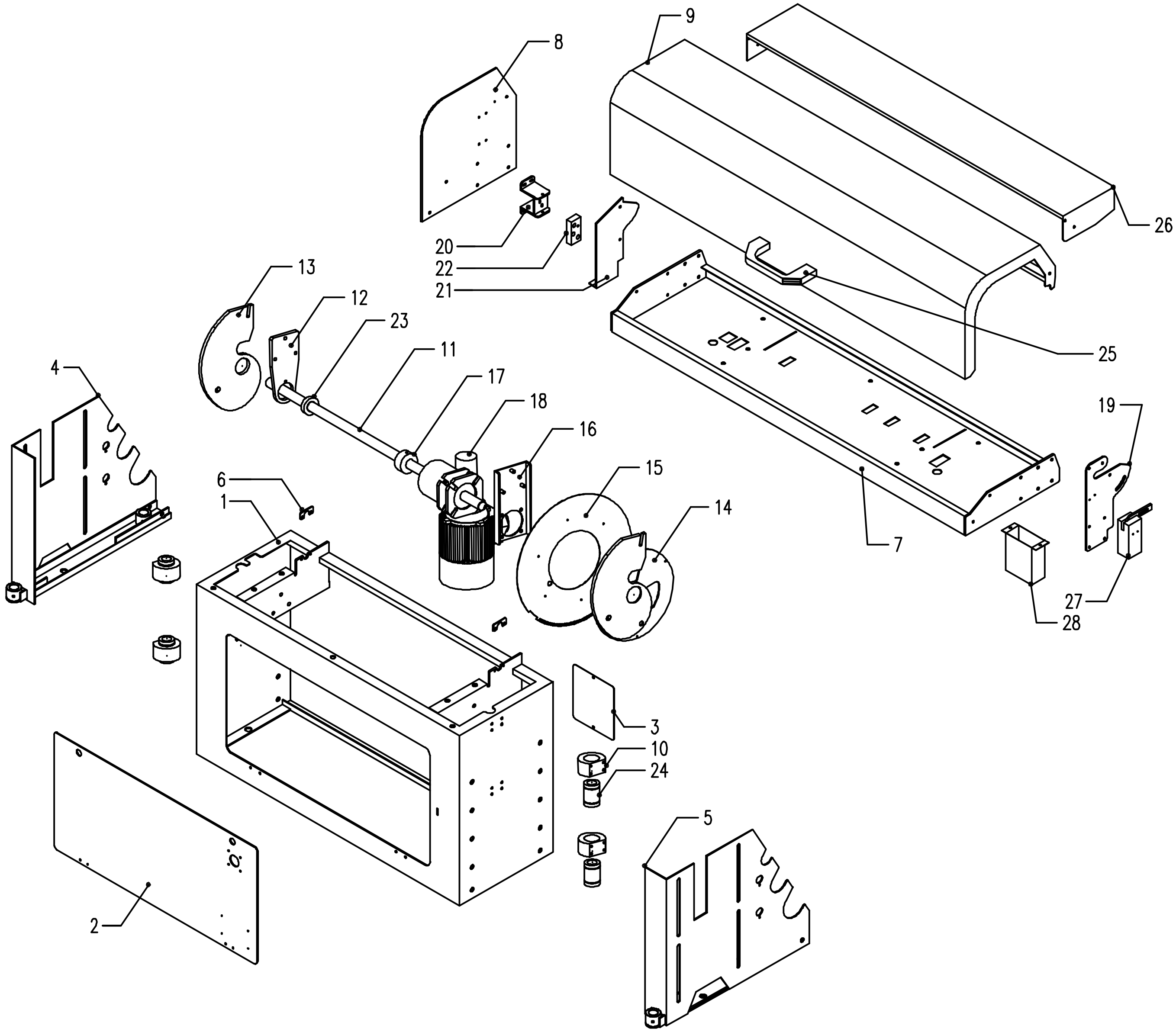

N.	Code	Denomination
1	T16310100	Control box
2	T16310200	Cover
3	T16310300	Cover
4	T16450200	Stand(L)
5	T16450100	Stand(R)
6	T16310600	Plate
7	T16310700	Beam
8	T16310800	Plate
9	T16311000	Cover
10	T16320100	Support
11	T16320200	Anchor
12	T16320300	Plate
13	T16320500	Cam
14	T16320600	Cam
15	T16320700	Plate
16	T16320800	Anchor
17	T16320900	Collet
18	T16321000	Motor
19	T16350200	Plate
20	T16330200	Support
21	T16350300	Plate
22	T16330500	Anchor
23	6005ZZ	Bearing
24	LM25uu	Bearing
25	G81120900	Handle
26	T16350100	Cover
27	J311801	Safety sensor of cover
28	T16311400	Cover

Rebel 102 SE

CAM

Tab. 030 1

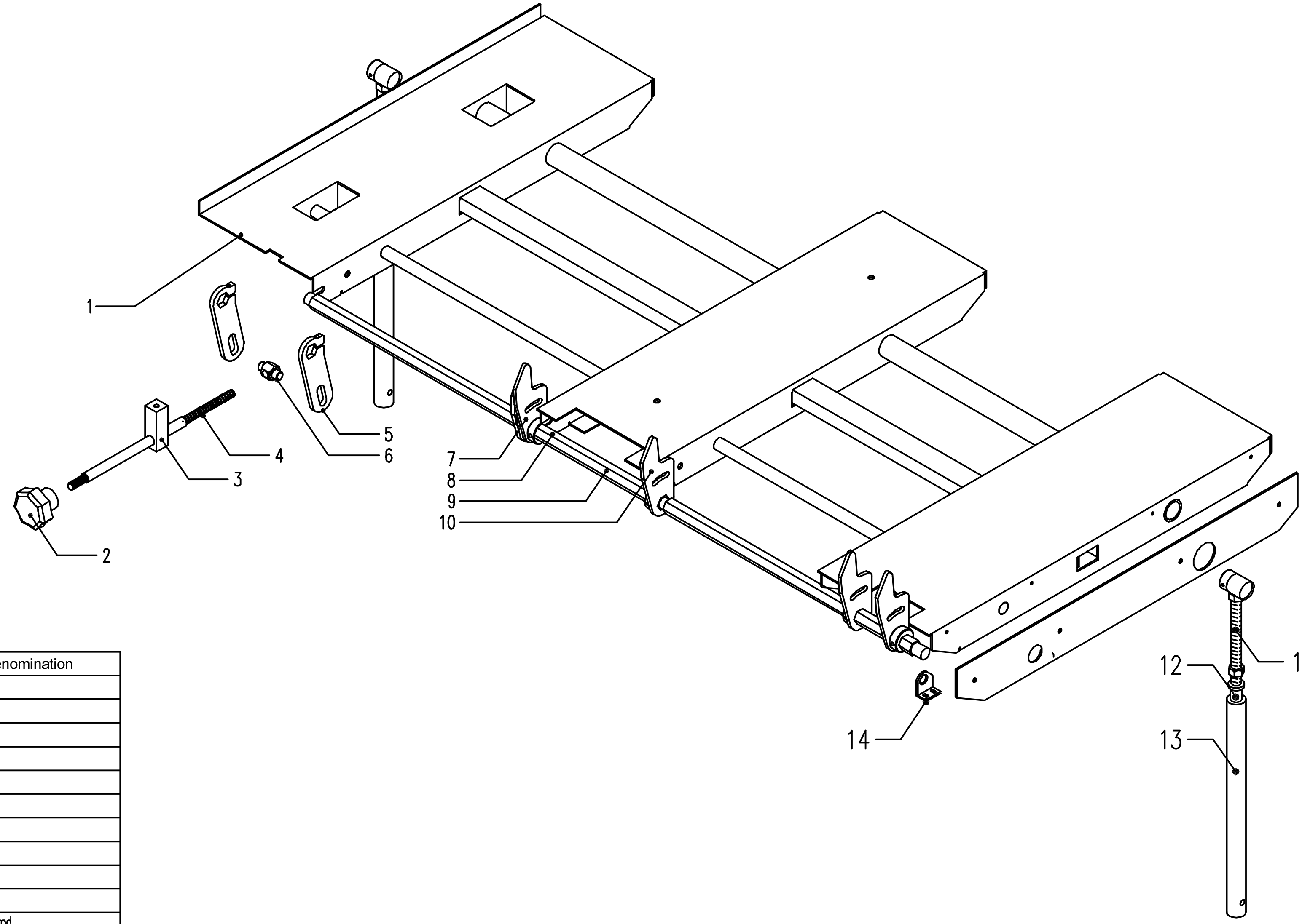

N.	Code	Denomination
1	T16440100	Support
2	T16411400	Knob
3	T16411100	Plate
4	T16411000	Rod
5	T16410900	Plate
6	T16411200	Screw
7	T16410410	Plate
8	T16410600	Plate
9	T16410500	Bar
10	T16410400	Plate
11	G62120700	Thread rod
12	G62120800	Spacer
13	G62120900	Support
14	T16310601	Plate

Rebel 102 SE

SUPPORT

Tab. 040 1

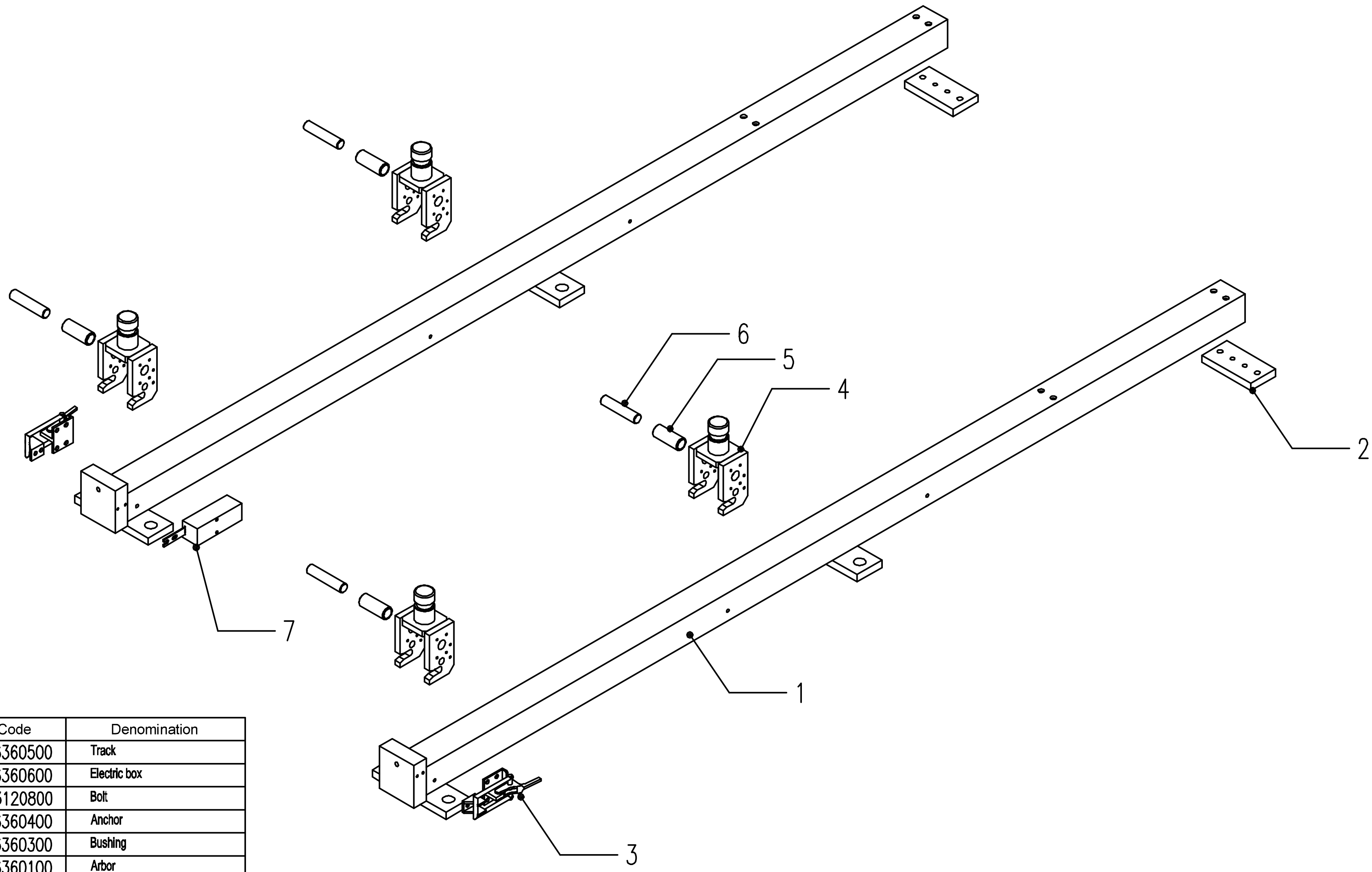

N.	Code	Denomination
1	T16360500	Track
2	T16360600	Electric box
3	G73120800	Bolt
4	T16360400	Anchor
5	T16360300	Bushing
6	T16360100	Arbor
7	J311802	Safety sensor of cover

Rebel 102 SE

AXIAL DISPLACEMENT

Tab. 041 1

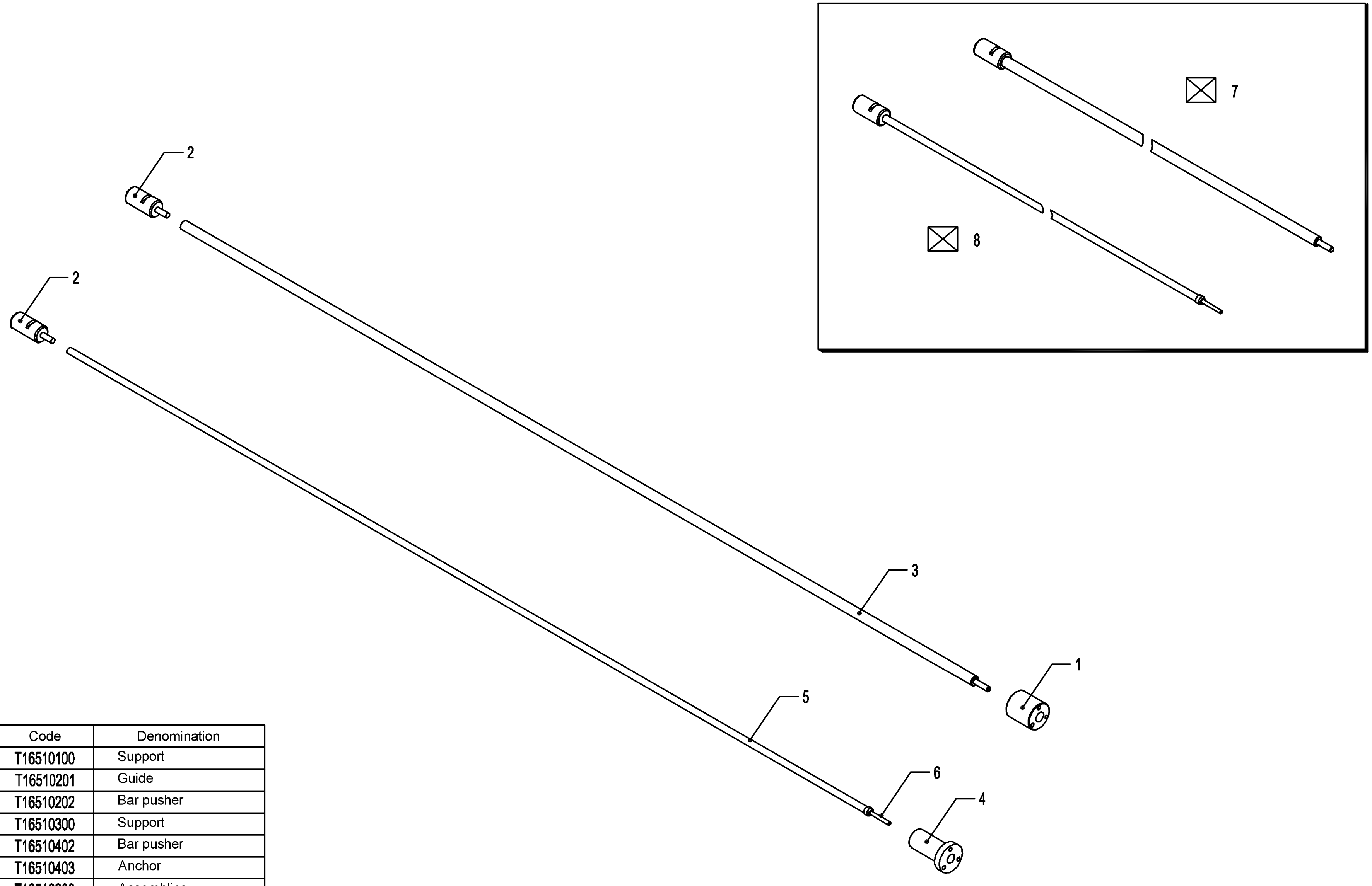

N.	Code	Denomination
1	T16510100	Support
2	T16510201	Guide
3	T16510202	Bar pusher
4	T16510300	Support
5	T16510402	Bar pusher
6	T16510403	Anchor
7	T16510200	Assembling
8	T16510400	Assembling

Rebel 102 SE

PUSH BAR

Tab. 050 1