EDGE TECHNOLOGIES

Revision 1.0

Scout 320 SE

OPERATIONS MANUAL

SCOUT 320 SE

HYDRODYNAMIC AUTOMATIC BAR FEEDER

SCOUT 320-SD/37 EXT/SCOUT 320SD/37R EXT

MANUAL FOR USE AND MAINTENANCE

REV. 1 DATE 2025/09/15 COD BMM103032

S/H _____

Contents

1. General Information 6

1.1 Contents of This Manual 6

1.2 Machine Safety 6

1.3 Indemnification 7

1.4 Hardware and Software Changes 7

1.5 Machine Serial Plate 8

1.6 Customer Support 8

2. Technical Information 9

2.1 Description of the Bar Feeder 9

2.2 Machine Diagram and Installation Area 10

2.3 Bar Feeder Oil Requirements 10

2.4 Technical Specifications 11

2.5 Guide Channel Specifications 11

2.6 Compressed Air Supply, Including Oil 12

3. Safety 13

3.1 Covers and Hood Switch 13

3.2 Emergency Stop Buttons 13

3.3 Electrical Safety 14

3.4 Electrical Connection 15

4. Transportation and Handling 16

4.1 Unpacking the Bar Feeder 16

4.2 Transportation and Hoisting 17

5. Installation 18

5.1 Lathe Preparation 18

5.2 Installation Area 19

5.3 General Installation Guide 20

5.4 Bar Feeder Installation Process 21

5.5 Installation Components 24

6. Systems and Adjustments 25

6.1 Height Adjustment 25

6.2 Light Tower 26

6.3 Spindle Liner 27

6.4 Rotating Tip 28

6.5 Pre-Feed Pusher and Pusher 29

6.6 Magazine Adjustment 30

6.7 AVD/MAVD Adjustment 31

6.8 Pusher Drive Belt Adjustment 34

6.9 Guide Channel System 35

6.10 Push Lock Cylinder 37

6.11 Measurement Flag 37

6.12 Gripper Assembly 38

6.13 Material Standards and Requirements 39

6.14 Vibration Troubleshooting Check List 41

7. Maintenance 43

7.1 Maintenance Chart 43

7.2 Inspecting Pusher Collet and Revolving Tip 44

7.3 Inspecting Air Regulator 45

8. Control Operations 46

8.1 HMI Description 46

8.2 Manual and Auto Screen Layouts 47

8.3 Handheld Pendant Layout 48

8.4 Power Up 49

8.5 Advance / Retreat at Low Speed 49

8.6 Automatic Work Operation 49

8.7 Resetting the Bar Feeder Home Position 49

8.8 Loading with the Bar On and Bar Off Buttons 50

9. Parameters **51**

9.1 Parameter Pages and Definitions: Part Menus 51

9.2 Parameter Pages and Definitions: Factory Menus 53

9.3 Parts Programming: Loading an Existing Part 59

9.4 Parts Programming: Loading an Existing Part 60

9.5 Parts Programming: Loading an Existing Part 61

9.6 Parameter Pages and Definitions: Admin Menus 62

10. Alarms **63**

10.1 Alarm Table 63

11. Interface Signal Definitions **68**

12. Workholding or Service **70**

13. Index **71**

1. General Information

⚠ **WARNING**

Please read and understand the manual before operating the bar feeder. Failure to do so could result in hazardous conditions that could result in severe injury or even death, and could cause material damage to the bar feeder.

1.1 Contents of This Manual

The bar feeder manufacturer has provided this manual as an integral part of the bar feeder. By adhering to the manual instructions, operators may prevent injury to themselves and/or damage to the bar feeder, as well as maximize the potential of the bar feeder and machine tool.

Throughout the manual, the following symbols denote important points of information:

⚠ **DANGER**

Exercise extreme caution. This warning indicates a high-risk level which, if not avoided, will cause death or severe injury.

⚠ **WARNING**

This symbol warns of a hazard with a medium risk level which, if not avoided, could cause death or severe injury.

⚠ **CAUTION**

Caution indicates possible hazardous conditions. It warns of a hazard with a low risk level which, if not avoided, could cause minor or moderate injury.

NOTICE

A notice indicates that misuse could cause material damage.

1.2 Machine Safety

Operators must provide proper safety equipment to safeguard the operator from harm or injury during operation or setup. It is the operator's responsibility to safeguard the bar feeder according to all federal, state, local government, and industry safety standards. Only trained personnel should operate the bar feeder. Improper use could result in equipment damage and/or personal injury.

1.3 Indemnification

The operator agrees to indemnify and hold harmless Edge Technologies from all claims or liabilities from accidents involving the bar feeder caused by failure of operators, employees, or agents to follow instructions, warnings, or recommendations furnished by Edge Technologies, or by failure of the user to comply with federal, state, and local laws applicable to such equipment, including the occupational Safety and Health Act of 1970.

1.4 Hardware and Software Changes

While Edge Technologies persists as the premier bar feeder supplier in the industry, ongoing development and upgrades to software and hardware are possible. All software noted in this manual is current to the print of this manual. For latest developments and upgrades, please visit www.edgetechnologies.com.

1.5 Machine Serial Plate

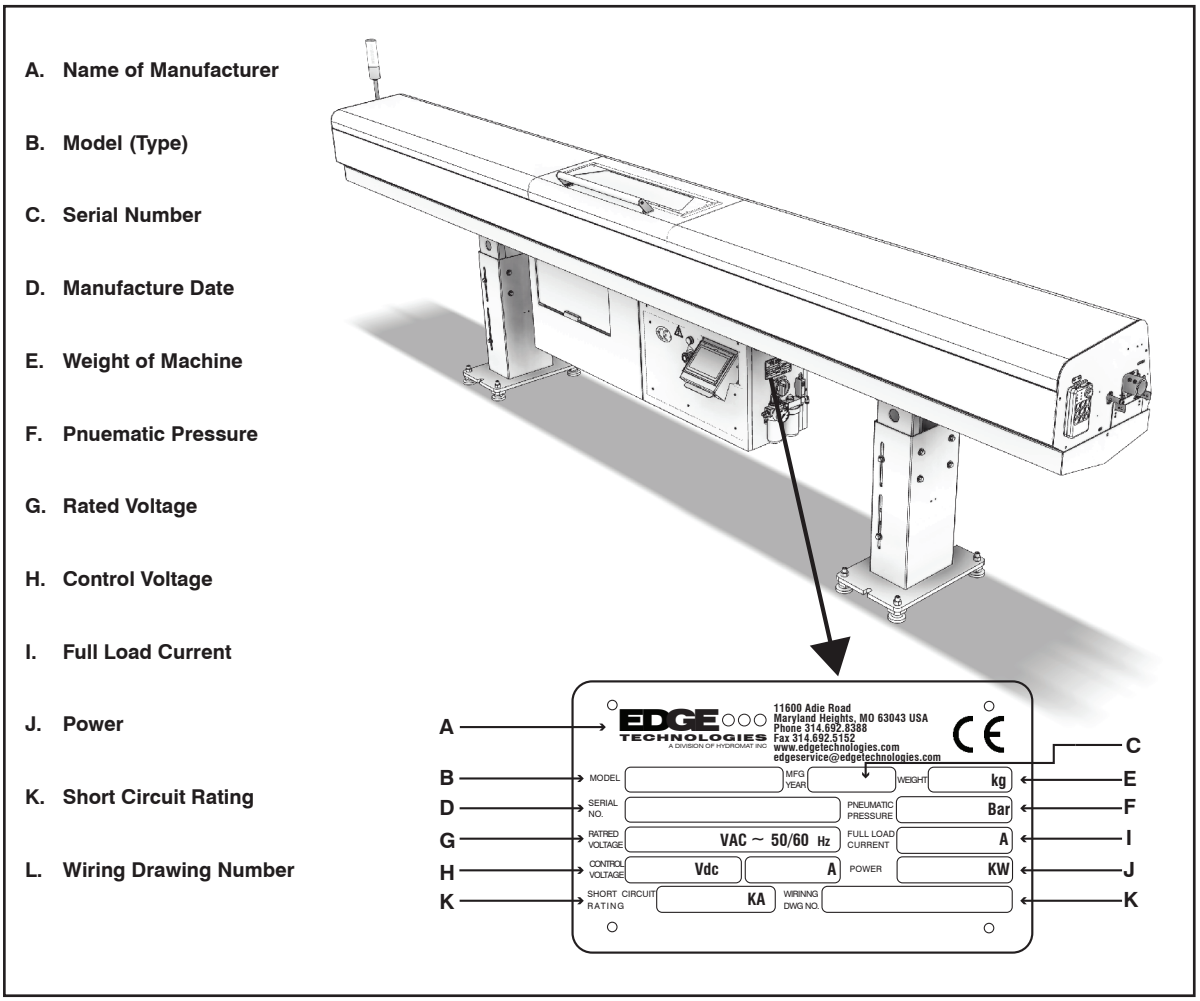

Important Information: When inquiring about parts or service, please have the machine model type and serial number available. Refer to the machine data plate pictured above for information.

1.6 Customer Support

For the Parts department, contact us (314) 810-3959, or email at orderdesk@edgetechnologies.com

For the Service department, contact us (314) 810-3927, or email at edgehelp@edgetechnologies.com

2. Technical Information

2.1 Description of the Bar Feeder

The Scout is a PLC controlled automatic bar feeder designed for both Swiss-type and fixed headstock lathes. The bar feeder is constructed to handle a wide variety of material profiles.

The bar feeder uses hydrodynamic design to dampen vibrations caused by bar stock rotation. The bar stock spins within a polyurethane channel that is flooded with a high-viscosity circulating oil. This creates turbulence within the channel that serves to steady the material and control vibration. The end of the bar stock is supported by a bearing unit on the end of the bar pusher and the workholding system of the lathe.

An anti-vibration device is located at the front of the bar feeder. Polyurethane bearing supported wheels surround the bar, leaving a few millimeters clearance between the bar and the wheels. For Swiss-type sliding headstock lathes, a movable anti-vibration device is mounted on the rear of the lathe headstock to provide even more support and vibration dampening.

2.2 Machine Diagram and Installation Area

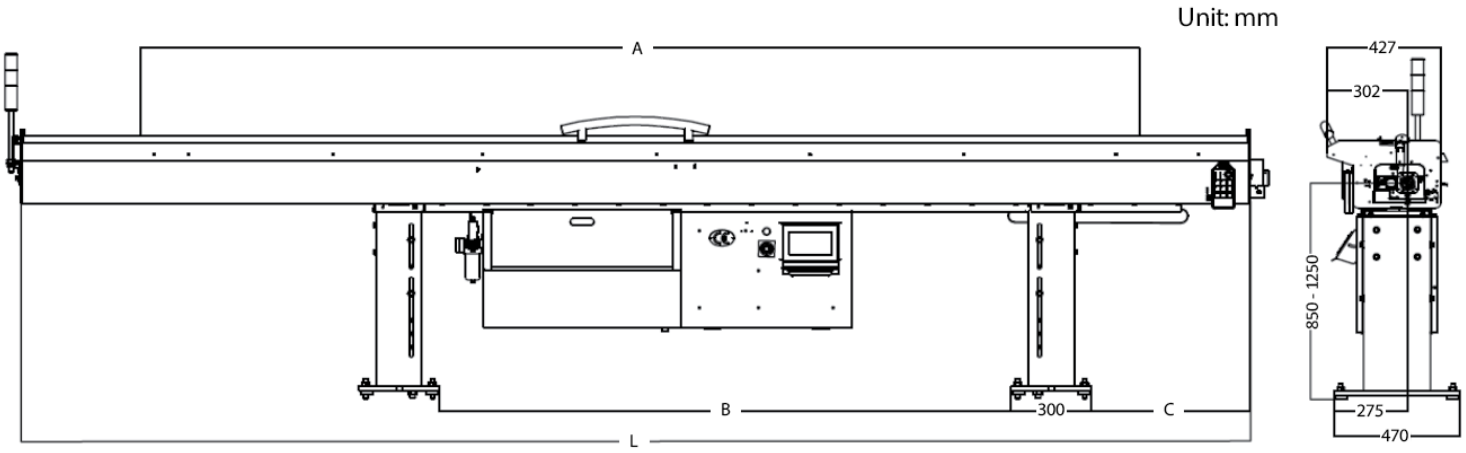

Lengths	Measurement
L	4599mm
A (Max. Bar Length)	3800mm
B	2150mm
C	584mm
Weight	1020lbs

2.3 Bar Feeder Oil Requirements

Viscosity	Brand	Description
ISO 64 Oil	BP	Energol HLP 68
	Castrol	Magna 64
	Esso	Nuto H 64
	Mobil	Circulating Oil ISO 68
	Shell	Morlina S1 B 68

2.4 Technical Specifications

Bar diameter
3mm to 27mm (0.118” to 1.062”)

Bar length
1000mm (39.4”) - 3800mm (12’5”)

Maximum remnant length
420mm (16.5”)

Bar loading cycle time
Approx. 35 seconds for 12’ bars

Feed force (pusher torque)
Max 450 N, adjustable

Forward feed rate
593mm/sec (1400 in/min) max, adjustable

Return feed rate
1000mm/sec (2360 in/min) max, adjustable

Power consumption
1.5 kW/2 kVA

Operating voltage
230 V/60 Hz - 3 phase

Control voltage
24V DC

Oil capacity
46 liters (12 gallons)

Oil viscosity
ISO 64 cST - Machine oil
ISO BG32 - Air oil

Compressed air supply
(6 bar) - 90 psi

Compressed air consumption
~8 liters per loading cycle

Machine weight (without oil)
463 kg (1020 lbs)

Material straightness specification
0.007” TIR/foot of material (V blocks, 6“ equidistant)

1,000+ Part Program Storage

PLC motion control is Ethernet ready

2.5 Guide Channel Specifications

NOTICE

Use the channel set recommended for the bar stock diameter to avoid bar feeder or lathe damage.

Guide Channel Sets	Pusher Dia.	Min. Bar Size	Max. Bar Size	Max. Bar Size with Front Remnant Expulsion*
Ø 8mm	7.5mm	3mm (0.118")	6.4mm (0.250")	7mm (0.275")
Ø 11mm	10mm	3mm (0.118")	9mm (0.354")	10mm (0.393")
Ø 14mm	12mm	3.2mm (0.125")	11mm (0.433")	13mm (0.512")
Ø 16mm	15mm	5mm (0.196")	12.7mm (0.500")	15mm (0.594")
Ø 18mm	16mm	5mm (0.196")	14.2mm (0.562")	17mm (0.669")
Ø 20mm	18mm	8mm (0.315")	16.26mm (0.640”)	19mm (0.750”)
Ø 22mm	20mm	8mm (0.315")	19mm (0.750"	21mm (0.826")
Ø 24mm	22mm	8mm (0.315")	20mm (0.787”)	23mm (0.905")
Ø 28mm	26mm	10mm (0.395")	25.4mm (1.000")	27mm (1.062")

* Bar stock larger than the standard maximum diameter up to the collet diameter may be used if the bar end diameter is reduced to fit a standard collet. An ejection collet may also be used if the end of the material is chamfered to match the angle of the ejection collet.

2.6 Compressed Air Supply, Including Oil

⚠ WARNING

When working with compressed air, proper PPE is required in accordance with federal, state, and local laws. Flying air particles can be a hazard for eyes and exposed parts of the body.

Compressed air supply must be available for machine operation.

The supply hose for compressed air supply must be larger than 8 mm.

Pressure must be over 5-7 kg/cm² 71.11 – 99.56 PSI, Consumption about 50L/H.

Connect the air supply tube into (A). Pull up and rotate knob counterclockwise (B) and set the pressure at 6kg/cm² 71.11 – 99.56 PSI.

Use an air system lubricant with a viscosity of 32, temperature 40 degrees Celsius, ISO VG type.

Oil level should be checked monthly. Use the recommended oil to avoid damage to the pneumatic system. Adjust control air lubrication from cylinder, 1 - 2 drops/1000L air if necessary.

Air Unit Lubricating Oil - ISO VG32				
BP	Castrol	Chevron	Mobil	Shell
Energol HLP 32	Hyspin VG32	Regal R&O 32	DTE 24 or Light	Tellus 32

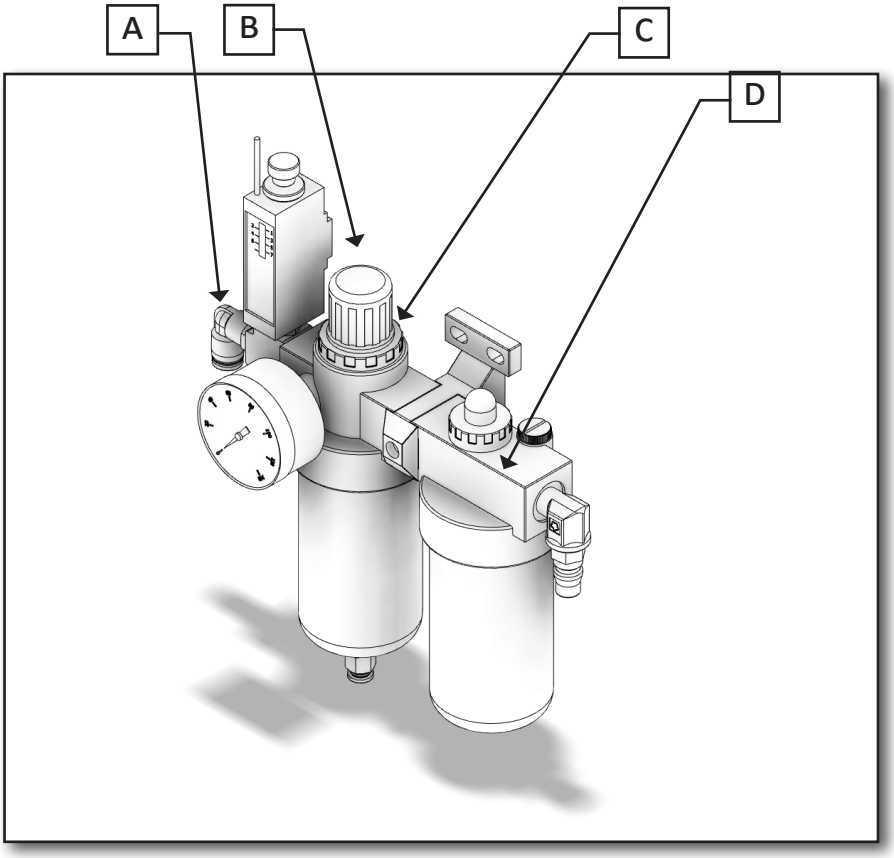

A: Air Supply Fitting

B: Air Regulator Knob

C: Lock Ring

D: Oil Supply Knob

3. Safety

⚠ DANGER

Safety switches should always be connected and in place during bar feeder operation.

The Scout is designed to be safe and reliable. Only trained personnel should operate the bar feeder. Personnel should be familiar with the operating instructions of the equipment before using it and should follow standard safety practices. The machine is equipped with safety devices to prevent accidental damage to the machine and injury to the operator. These devices must not be bypassed or tampered with.

3.1 Covers and Hood Switch

⚠ WARNING

Covers prevent access to moving parts during operation and should always be in place during bar feeder operation.

The hood of the machine is equipped with a safety switch to place the machine in alarm if the hood is not closed. The cover prevents access to the material on the rack and the bar separators.

3.2 Emergency Stop Buttons

⚠ WARNING

The Emergency Stop buttons should be tested monthly to verify the proper emergency stoppage of the lathe and bar feeder.

The Scout has two Emergency Stop buttons: one on the handheld pendant and one on the HMI. Button ES1 is an Emergency Stop button on the HMI control panel housing. Button ES2 is an Emergency Stop button on the remote pendant control. Pressing either Emergency Stop button disconnects the Emergency Stop circuit.

Contacts from the Emergency Stop buttons interface with the lathe Emergency Stop circuit, so the lathe can be manually placed into an Emergency Stop condition from the Scout control panel. The lathe Emergency Stop system will place the bar feeder into Emergency Stop as well. Some lathes during Emergency Stop will cut the supply voltage to the bar feeder. This will not allow the bar feeder to meet the Emergency Stop reset requirements of the lathe. The lathe will be stuck in Emergency Stop and the bar feeder will not power up. If this occurs, please contact Edge Technologies for appropriate instructions. Verify Emergency Stop operation between the lathe and bar feeder is operational.

When the Emergency Stop on either machine is pressed, automatic operations are stopped immediately.

3.3 Electrical Safety

⚠ DANGER

Only a qualified electrician or serviceman should perform electrical troubleshooting or maintenance.

⚠ DANGER

Do not perform maintenance, repairs or adjustments without first locking out all electrical controls according to all federal, state, and local safety codes.

⚠ DANGER

Personnel should be trained in OSHA-compliant lock-out/tag-out and electrical safety procedures.

⚠ DANGER

Make certain that the power supply is disconnected before attempting to service or remove any components.

⚠ DANGER

Never should adjustments, maintenance or cleaning be performed without following proper safety procedures in accordance with local, state, and national safety codes.

Before making any electrical connections, verify the voltage that the bar feeder requires from the lathe with a voltmeter at the power supply connector. Verify that this voltage matches the required voltage of the bar feeder. Failure to do so may result in injury or damage to the equipment.

Normally, a bar feeder is ordered from Edge Technologies to be used with a specific lathe model. The wiring interface is set in accordance with the most current information received by Edge Technologies. The lathe manufacturer may update and change the main connector pin locations and circuits. It is important this is verified with the schematics of the lathe and bar feeder. In some cases, a harness is provided that must be wired into the lathe. All previous safety advisories and information must be adhered to. This form of connection allows for quick unplugging to clean or service without having to disconnect “hardwired” connections. Before starting the bar feeder, ensure no tools, packing, or other material have been left in the machine or lathe.

3.4 Electrical Connection

⚠ DANGER

The power supply voltage for the Scout 320 SE, the input, and the output signals between the bar feeder and lathe are supplied through the interface cable. The interface cable is pre-wired for the lathe application when shipped from Edge Technologies. Verify the connection to the lathe before applying voltage to the system. The lathe must support a bar feeder interface for the two machines to be connected. The power supply output on some lathes may be higher than the required 230V. If this is the case, an additional transformer will be required to step down the lathe voltage for the bar feeder.

4. Transportation and Handling

⚠ DANGER

Without packaging, the Scout 320 SE weighs approximately 1,020 lbs. Only trained operators are to use lifting equipment. Improper handling can result in an operator being crushed. Verify that the equipment to be used for moving the machine is rated to safely lift the weight of the bar feeder plus the packaging material. Make special note that the machine is top heavy and take proper precautions.

4.1 Unpacking the Bar Feeder

Lifting and moving the bar feeder by forklift is the preferred method of handling the machine. The forks must extend past the machine cabinet. Lift the machine from the side opposite the magazine and maintain sufficient clearance from the forklift mast to avoid contact. Take care to keep the load balanced. Do not lift the machine any higher than necessary.

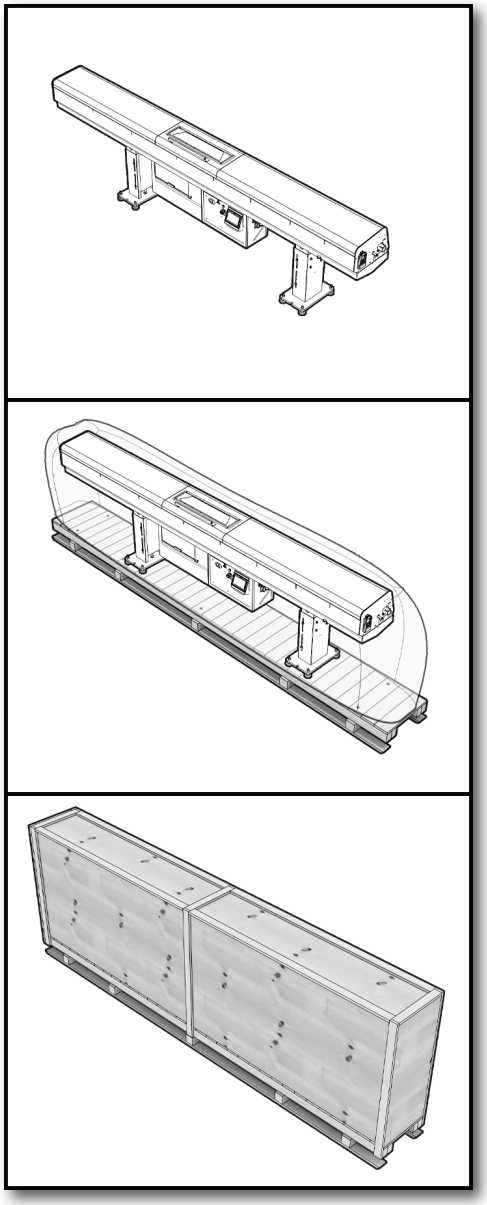

Packaging of the Bar Feeder

The bar feeder will arrive in one of three ways:

A: Without packaging

B: Attached to a skid or pallet

C: Crated in a wooden box

4.2 Transportation and Hoisting

Hoisting the bar feeder

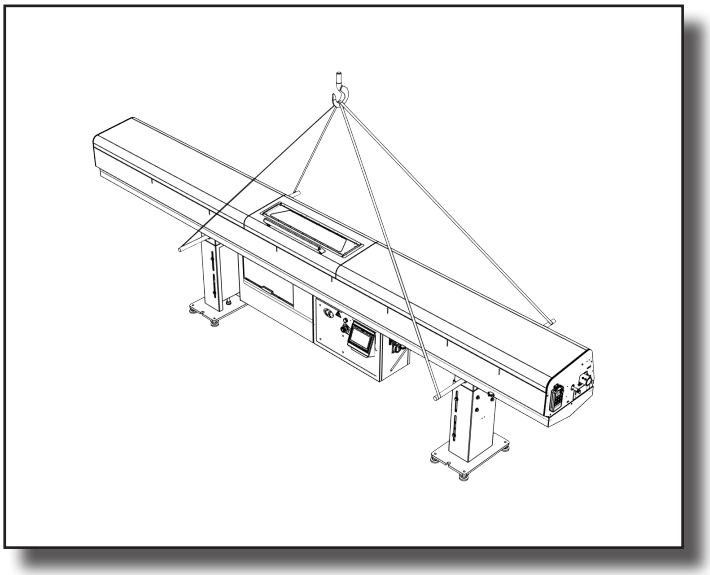

Place two steel bars (Diameter: 30mm, length: 1M) under the bar feeder outside of the stands. Using suitable lifting straps, hoist the bar feeder.

Hoisting with bar feeder on pallet

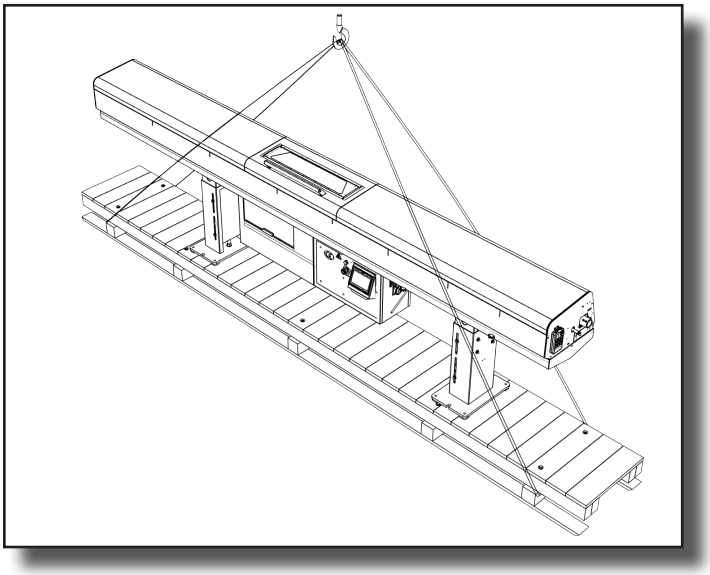

Position suitable lifting straps under the pallet near the stands.

Hoisting the bar feeder in a crate

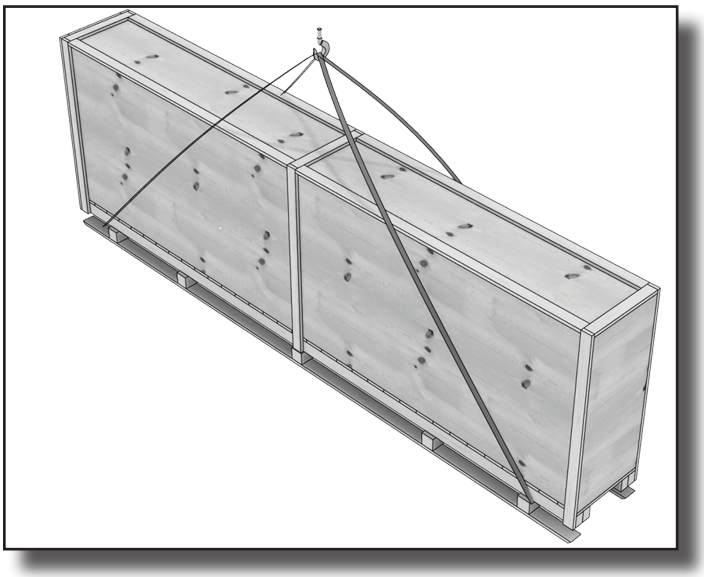

Position suitable lifting straps under the pallet near the stands.

5. Installation

5.1 Lathe Preparation

Prior to installing the bar feeder, the lathe installation must be completed and ready to produce parts. If no lathe spindle workholding is installed and if no compressed air is supplied, the bar feeder cannot be installed.

⚠ DANGER

Only qualified electricians or servicemen should perform any electrical troubleshooting or maintenance to this equipment.

⚠ WARNING

Be sure the lathe and bar feeder Emergency Stops are engaged when performing the manual alignment procedure.

The lathe must be operational to perform the alignment and installation with the proper chucking package.

Some lathe models have covers for the spindle area. These covers may or may not be on the lathe when the lathe is ready for bar feeder installation. Review with lathe personnel to identify the related covers. If the covers are off the lathe, this may become an issue if the bar feeder is positioned close enough that it would interfere.

5.2 Installation Area

NOTICE

The floor on which the bar feeder is placed must be designed to bear the loads. Non-observance can lead to material damage. The Scout must be bolted to a sound, level floor using anchor bolts. The area surrounding the machine must allow sufficient clearance for the operator to access both sides and the rear of the machine, as shown in the diagram below.

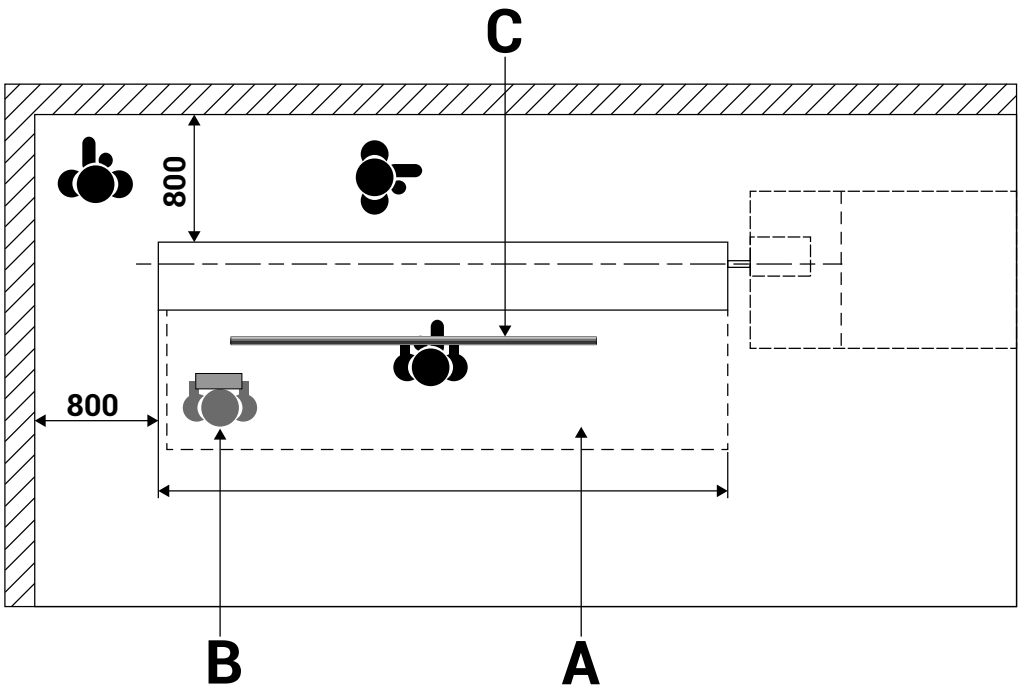

The area surrounding the installation area must allow sufficient clearance for the following:

A - Operator area

B - Remnant material area

C - Supply area

This ensures an adequate working area. All values are in metric.

5.3 General Installation Guide

⚠ WARNING

The following steps are to be performed by a trained technician.

Step 1: Inspect the bar feeder for damage.

• Carry out a detailed inspection of the bar feeder to ensure no components have been physically damaged.

Step 2: Make sure the location has all required items they will need.

• Communicate directly with the person in charge, so decisions can be made in a timely fashion.

• Ask to be made aware of any special regulations or safety requirements to adhere to while working in the facility.

• Ask and be introduced to the employee(s) that will require training.

• Request the required oil be prepared for the bar feeder.

Step 3: Check inventory.

• Adaption kit. Verify that all components are present (refer to pick list supplied with the bar feeder).

• Guide channel, pushers, collets, noses. Ensure that all parts are there and are correct.

• If spindle liners are required, ensure they are correct for the lathe, and test load them.

• Verify that all hardware required for the alignment, anchoring and installation are present.

5.4 Bar Feeder Installation Process

1. Inspect the bar feeder for any shipping or handling damage, and report as necessary.

2. Verify the lathe installation condition.
- Lathe is level for operation.
- Lathe will power up.
- Lathe has a collet or chuck package.
- Lathe is free of any alarms.

3. Verify components of the pre-installation checklist are complete.
- Ensure access to compressed air to the bar feeder installation location.
- Bar feed oil is available and correct for the application.
- Material for parts is available.
- Spindle liner is available if required.

4. Verify bar feeder components are present.
- Required bar feed level pads and associated nuts, washers and bolts
- Anchor bolts
- Headstock adapters
- Correct channel set installed
- Threader rod, bracket, and nuts
- Telescopic nose or hard nose
- Hard nose insert, if required
- Bushing blocks or rollers
- MAVD, if equipped

5. Calculate bar feeder positioning.
- Consider lathe headstock stroke.
- Consider bar feeder reach capability.
- Determine distance based on manual specifications.

• Consider axial shift requirements.
• Verify collapsibility of telescopic nose.
• Verify reach of telescopic nose.

6. Install laser or string components for alignment, and targets to bar pusher.
• Lathe collet/chuck
• Lathe guide bushing as required
• Lathe spindle
• Verify bar pusher reach and headstock stroke.
• Verify axial shift reach and stroke.

7. Drill and anchor bar feeder to floor.
• Verify floor is not heated.
• Drill holes complete through floor using an entire 12-inch drill stroke.
• Drive anchors completely into floor with associated fender and washers installed.
• Tighten anchors fully.

8. Verify alignment, adjust as necessary.
• Verify bar pusher reach and headstock stroke.
• Verify axial shift reach and stroke.

9. Install MAVD as required.
• Align MAVD.
• Adjust as required.

10. Install telescopic or hard nose.
• Install required inserts.
• Align as required.
• Cut the telescopic or hard nose as required.
• Verify collapsibility of telescopic nose.
• Verify reach of telescopic nose.

11. Connect synchronization rod.
• Cut threaded rod, as required.

• Adjust the stroke of the sync rod on the bar feed.
• Verify the axial shift sync switch adjustment, and adjust as required.

12. Cut lathe sheet metal.
• If additional machines are present, review for consistent appearance.

13. Verify lathe signals.
• Emergency Stop from lathe
• Emergency Stop from bar feeder
• Door signal
• Torque stop
• Bar change
• Auto cycle/cycle start
• Collet open/close

14. Perform Auto Bar Change with lathe.

15. Add Bar Change program to the lathe.

16. Add oil to bar feeder.
• Verify the oil on and off positions.
• Test running the oil for about 30 minutes to ensure proper flow.

5.5 Installation Components

Spindle liner: The spindle liner reduces the spindle internal diameter to support the pusher. Some applications do not require a spindle liner. This is true when the spindle bore diameter is the same as the pusher.

Microtube Nose: The microtube nose replaces the nose and spindle liner in small-diameter applications, reducing the spindle internal diameter to support the pusher.

MAVD: This is used only on Swiss-type lathes. The MAVD is attached to the end of the spindle of the lathe. The device aids in material support between the headstock and bar feeder. This is always installed unless a special condition is present that would keep the pusher from reaching the required maximum pusher travel. Contact Edge Technologies for more information.

Telescopic nose: For lathes with a sliding headstock, the telescopic nose bridges the gap between the front of the bar feeder and the back end of the lathe. It acts as a protective cover and prevents rotating parts from coming out. The telescopic tube extends and collapses with the movement of the headstock. The telescopic nose is matched to the size of the channel set. Any time a channel set is changed, the nose must be changed as well.

Hard nose and insert: For lathes with a fixed headstock, the guide tube bridges the gap between the front end of the loading magazine and the back end of the lathe. It serves as a protective cover and prevents rotating parts from coming out. Hard nose inserts need to be cut to the length of the nose.

Synchronization rod: The synchronization rod is connected at the MAVD. For more information, see the Parts section.

Oil tray drip pan: This is used under the telescopic nose to collect any oil that leaks out of the telescopic nose and back into the bar feeder.

Oil gathering: This is a unit that will go over the end of the hard nose to gather oil that leaks out the front.

6. Systems and Adjustments

6.1 Height Adjustment

⚠ CAUTION

Verify the jackscrew is mounted in the stand base prior to loosening the side lock bolts. If the jackscrew is not in the stand plate, the bar feeder can lower spontaneously.

A total of 8 jackscrews and nuts must be installed into the base of the stands. A metal puck is then placed between the floor and the stand plate. Be sure the stand is level by the jackscrews prior to adjusting the stand height.

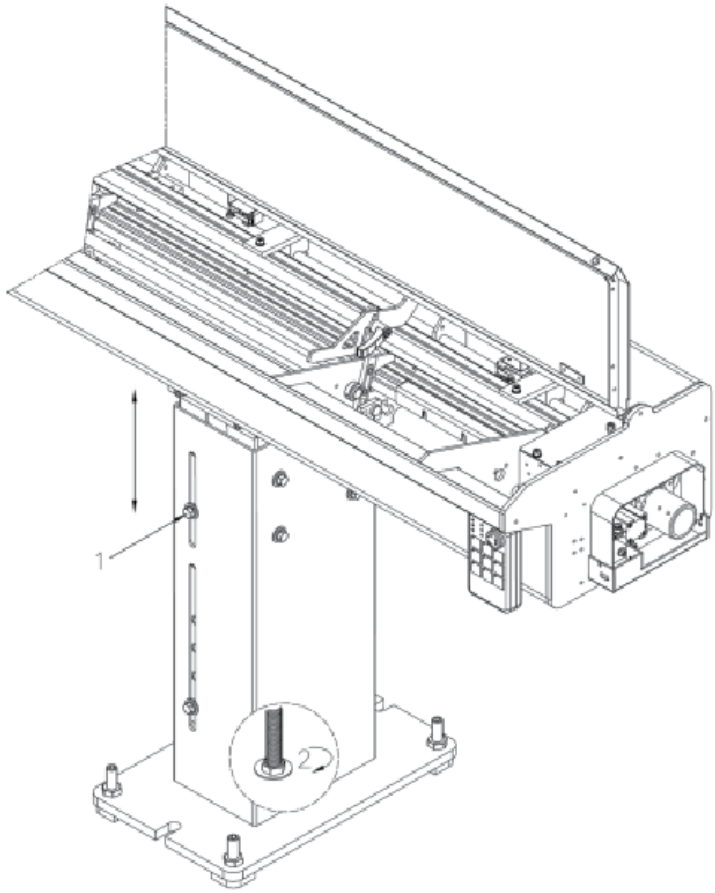

1. Loosen 4 locking screws on the side of the stands.

2. Adjust the screw up or down to achieve correct height. Adjust the bar feed height to center the channel to the lathe spindle.

3. Tighten the screws when the alignment is completed.

6.2 Light Tower

The indicator light provides quick visual indication of bar feeder status. The bar feeder PLC directly controls the operation of the tower light.

Status conditions include:

Red light is on: The bar feeder is in alarm.

Green light is on: The bar feeder is in Automatic mode.

No light is on: The bar feeder is in manual mode with no alarms.

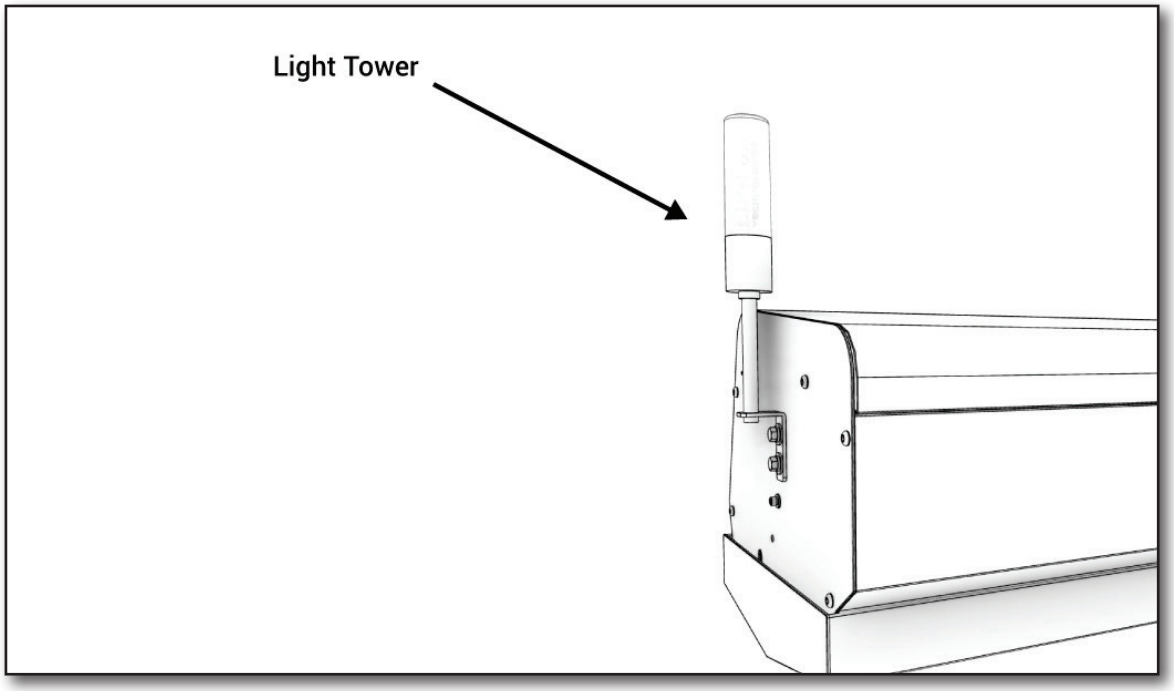

6.3 Spindle Liner

⚠ WARNING

Prior to spindle liner insertion or removal, ensure the lathe is in Emergency Stop or that power to the lathe is off. Never remove or install a spindle liner to a spindle that can be powered on during this process.

⚠ WARNING

Do not operate the lathe if the extended cover is off while using an extended spindle liner. Doing so could cause personal injury and machine damage.

NOTICE

Use the proper fasteners for the spindle liner retaining ring and, if equipped, for the spindle liner extension housing.

To provide the most support to the long pusher, the lathe spindle normally requires a spindle liner. This liner reduces the inner diameter of the spindle to the diameter of the pusher. The liner's inner diameter should be about 2mm larger than the pusher from the bar feeder.

When installing a spindle liner for the first time, the liner end may need to be cut. It is a normal practice for the liner to be longer, because various chucking packages are available. The end of the liner should be about 13mm from the rear of the chuck jaws or collet. Any further and this could cause remnant ejection issues.

6.4 Rotating Tip

NOTICE

The rotating tip should match the diameter of the pusher. Running too small or too large of a rotating tip diameter will cause damage.

NOTICE

Rotating tip operating life may be significantly reduced without the proper bar feeder oil.

The rotating tip is designed for many hours of operation. It is internally lubricated by the factory and normally does not require additional lubrication. However, the rotating tip does require proper oil flow within the channel. This helps to cool it and provide lubrication between the channel and tip. Some users operate the bar feeder with lathe cutting fluid or an aqueous based fluid. Edge Technologies does not recommend using anything but the oil recommended in this manual for oil type.

Refer to the Parts section for part numbers and available sizes. The rotating tip diameter should be 1mm smaller in diameter than the guide channel set.

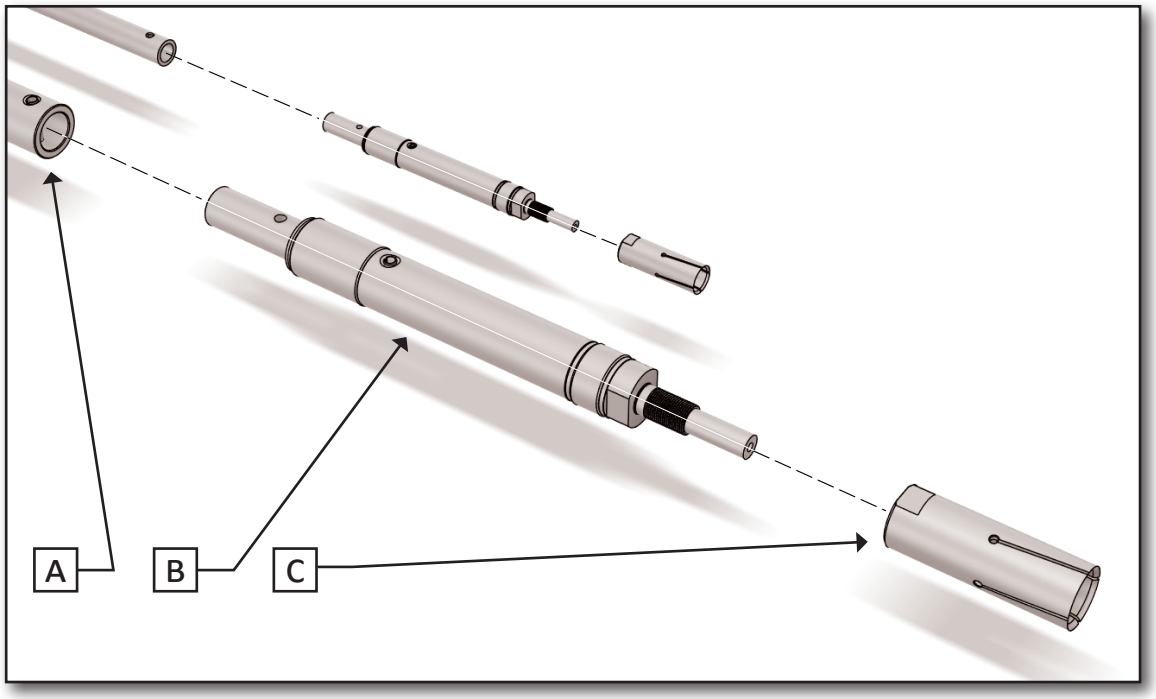

Bar Pusher Components

A: Bar Pusher

B: Rotating Tip

C: Collet

6.5 Pre-Feed Pusher and Pusher

⚠ WARNING

Do not replace the pusher or pre-feed pusher with electrical power applied to the lathe or bar feeder.

NOTICE

The pre-feed pusher must be the proper size to the bar channel hangers, or else damage may occur. Also, the length of the pusher must be fitted to the length of the bar feeder, or else damage may occur.

The pre-feed pusher drives the bar pusher and remnant forward. It is attached to a plate that is countersunk, so the attaching bolts require proper tightening. The holding torque of countersunk bolts is much greater than a socket head or buttonhead bolt. The greater surface area between the mating surfaces of the bolt acts as a locking mechanism, especially if the two surfaces are clean of any oils. Clean the bolts and threads with denatured alcohol or some type of oil-removing cleaner. A medium strength thread lock is recommended when installing the bolts. Do not overtighten the bolts. Doing so may cause issues when removing them.

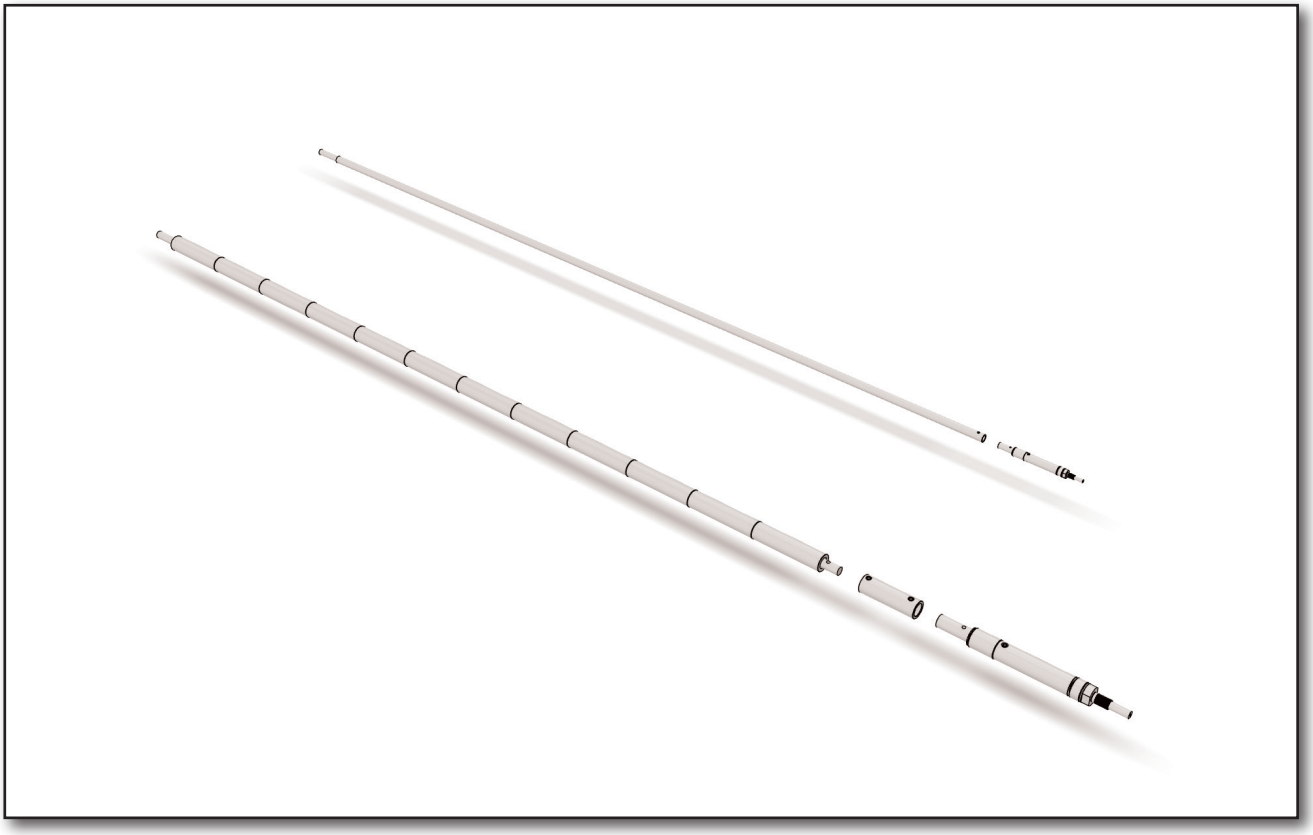

10mm and 20mm bar pusher assembly

6.6 Magazine Adjustment

⚠ CAUTION

When adjusting the magazine, be sure the lathe and bar feeder are in Emergency Stop. Adjusting the magazine can produce pinch points between magazine and material.

1. Place the lathe and bar feeder into Emergency Stop prior to adjusting magazine.

2. Remove any material from the magazine.

3. Loosen the locking lever (B) for the support plate (A) and lift the plate to the highest position. Tighten the lever back.

4. Place one bar to be loaded on the magazine.

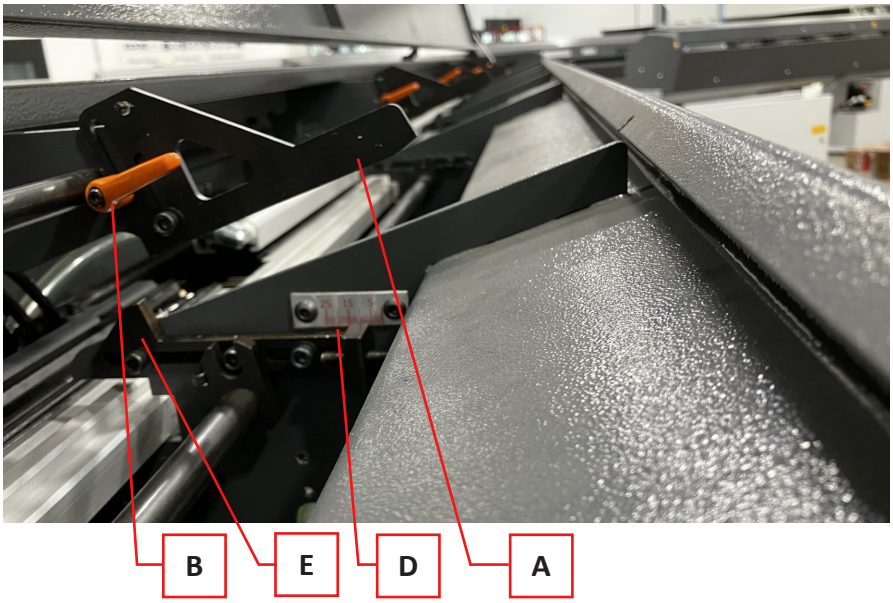

5. Rotate the knob (C) to adjust the bar stop so that only the first bar on the magazine will be lifted into the guide channel. While you rotate the bolt, you will see the vertical adjustment plate (D) move in the direction the bolt is rotated. The material lifter (E) will now accurately lift each piece of material one at a time.

6. Loosen the lever (B) and slide the support plate (A) down to 1mm over the bar to be machined.

7. Tighten the lever (B).

8. Load the desired material requirement.

9. Close the bar feeder hood.

10. Reset Emergency Stops on the lathe and bar feeder.

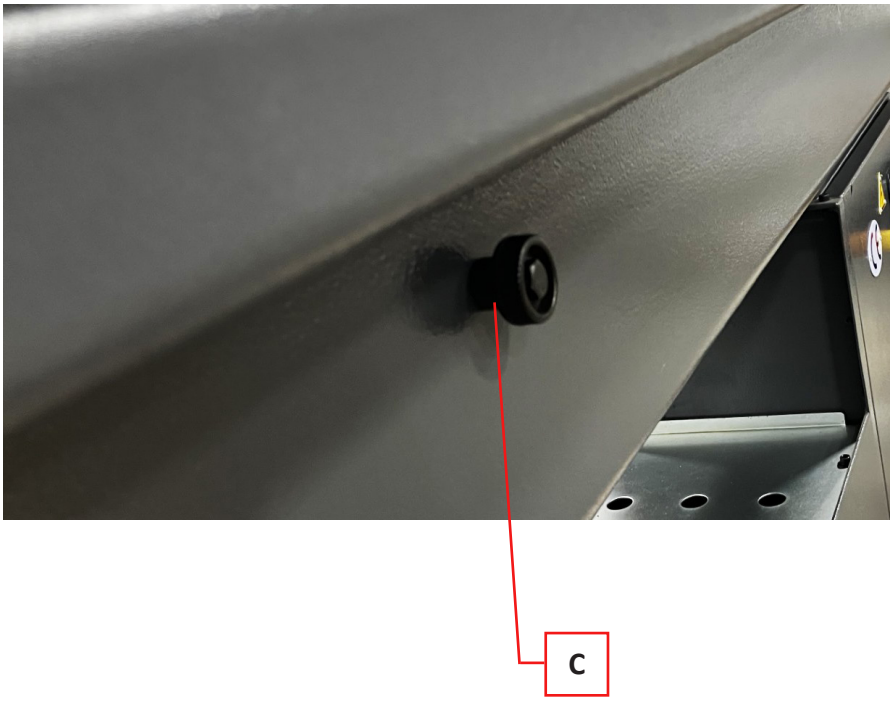

6.7 AVD/MAVD Adjustment

Proper adjustment of the Anti-Vibration Device **(AVD)** and Movable Anti-Vibration Device **(MAVD)** is important for proper machine operation. Proper adjustment will help support the bar and possibly reduce vibrations during production.

⚠ WARNING

Lathe and bar feeder must be in manual mode during the adjustment of the MAVD. Only operators properly trained should adjust the MAVD.

NOTICE

Improper adjustment may cause failure on the machined part.

NOTICE

When loading a bar for the first time, make sure the MAVD rollers are open. Roller damage may occur if material or pusher is moved into the rollers.

The AVD/MAVD is normally adjusted at the same time. Follow the adjustment process for both devices.

If the device is open when the bar feeder hood is open, the hood switch will need to be deactivated for the duration of the adjustment process. Once the adjustment has been completed, reactivate the hood switch.

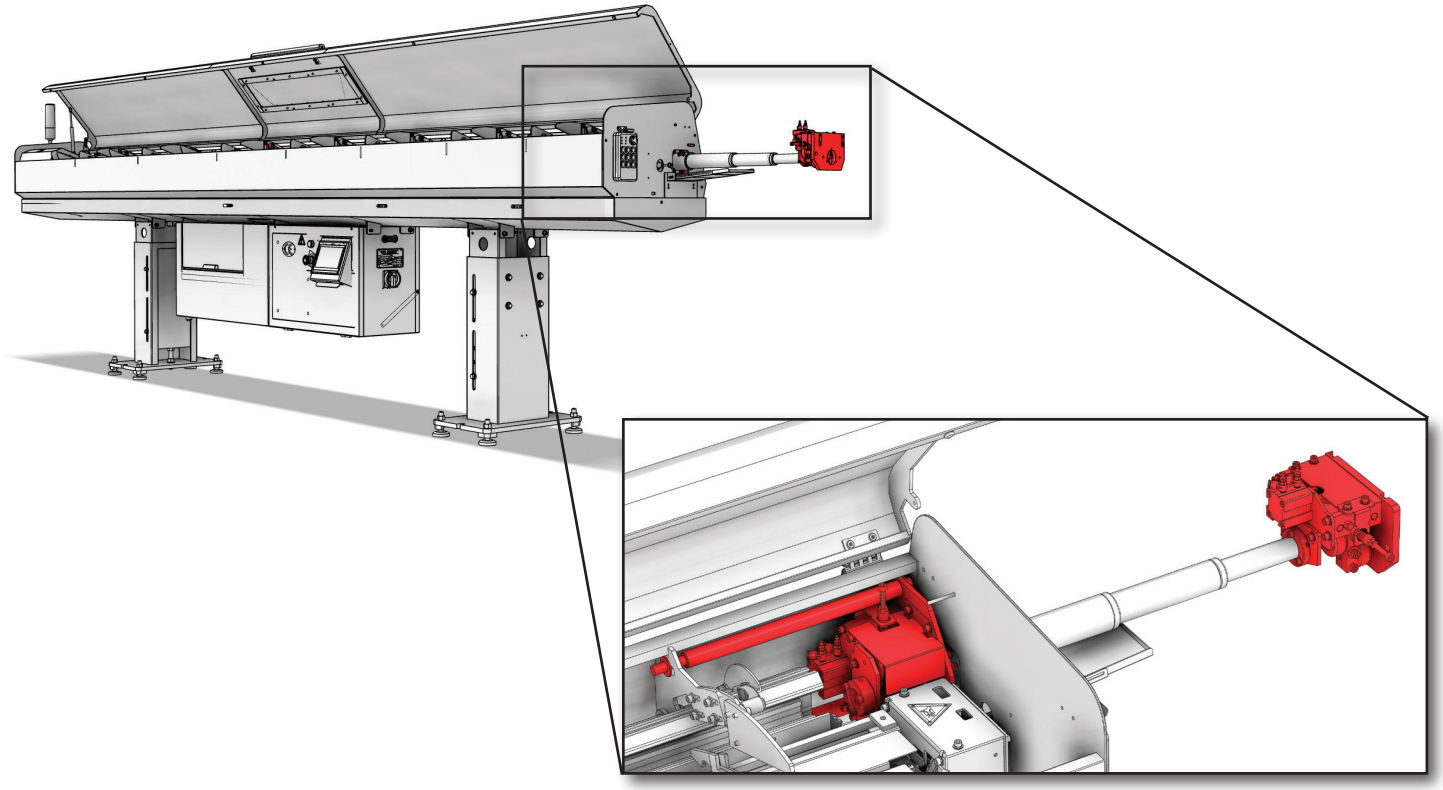

AVD and MAVD System

1. Using the bar feeder, load a bar into the lathe and close the lathe collet.
2. Open the bar feeder hood
3. Loosen the locking nut (A) and back adjustment bolt (B), moving counterclockwise until no resistance is felt when turning the bolt. Rollers will be opened from the material centerline.
4. On the handheld pendant press the Pre-Auto button. Both the AVD and MAVD will close.
5. Turn the adjustment bolt clockwise until resistance is met. Then rotate the bolt one more full turn clockwise. Tighten the locking nut.
6. Press the Manual button. The AVD/MAVD should open. Then press the Pre-auto button again.
7. Verify that the rollers are not clamped directly on the material but are very close to it.
8. Press Manual button again to open the AVD/MAVD.

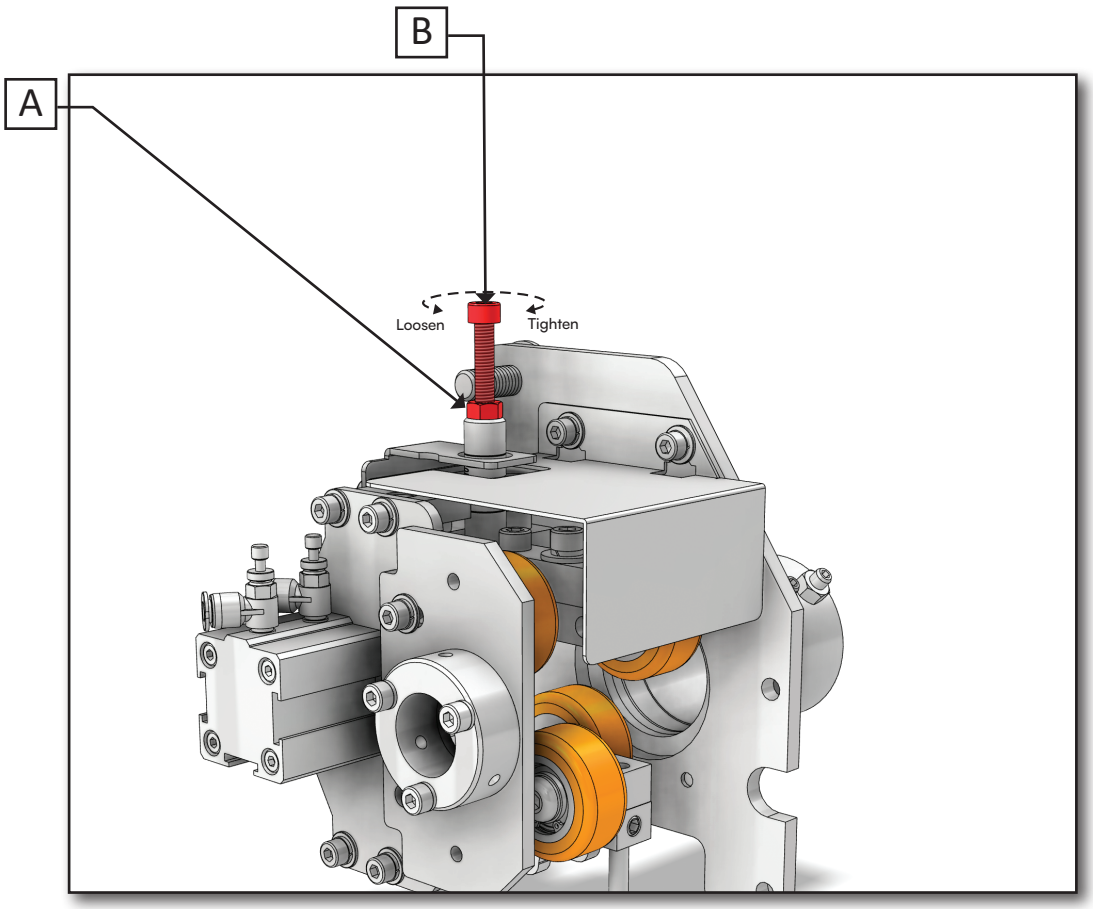

Anti-Vibration Device **(AVD)**

AVD Components

A: Locking Nut

B: Adjustment Bolt

Adjustment to the open and close speed of the MAVD/AVD is by way of the thumb screws (C, D) on the cylinder. Be sure the air supply lines are installed on the correct valve for correct operation.

When the lathe collet is closed, the MAVD/AVD rollers/blocks will be closed if the parameter is set to operate this way. Press the Pre-Auto button to command the MAVD/AVD to close as well. Adjust as required.

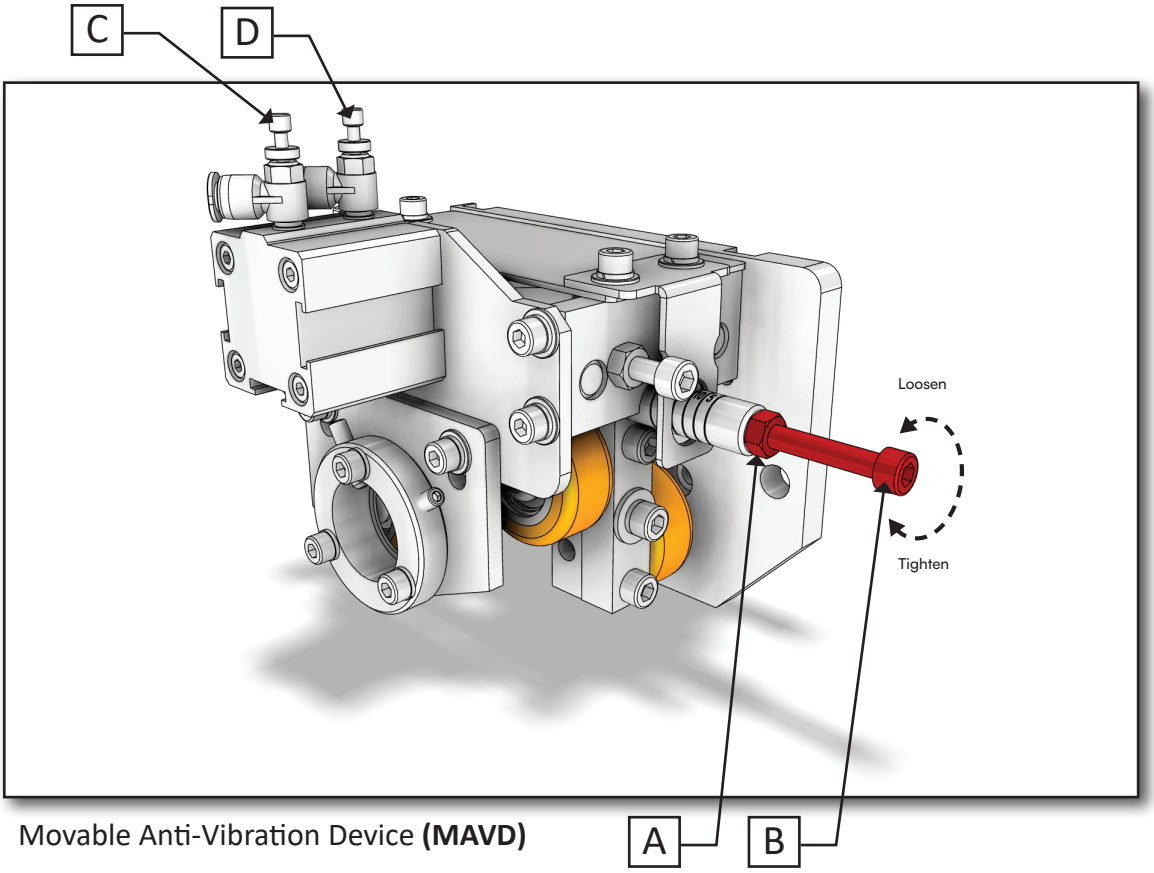

Movable Anti-Vibration Device **(MAVD)**

MAVD Components

A: Locking Nut

B: Adjustment Bolt

C: Closed Speed Valve

D: Open Speed Valve

6.8 Pusher Drive Belt Adjustment

⚠ WARNING

Only properly trained personnel should adjust the drive belt.

NOTICE

Bar feeder and lathe must be in Emergency Stop for a belt adjustment.

Follow the procedure below:

1. Place the bar feeder and lathe into Emergency Stop.
2. Remove any material from the channel that obstructs the pusher from moving.
3. Open the bar feeder hood.
4. Loosen the locking screw (1) for the tensioner.
5. Rotate the screw (2) clockwise to tighten the belt for suitable tension.
6. Tighten the locking screw (1).
7. Close the bar feeder hood.
8. Reset Emergency Stop and test the pusher operation with the handheld pendant.

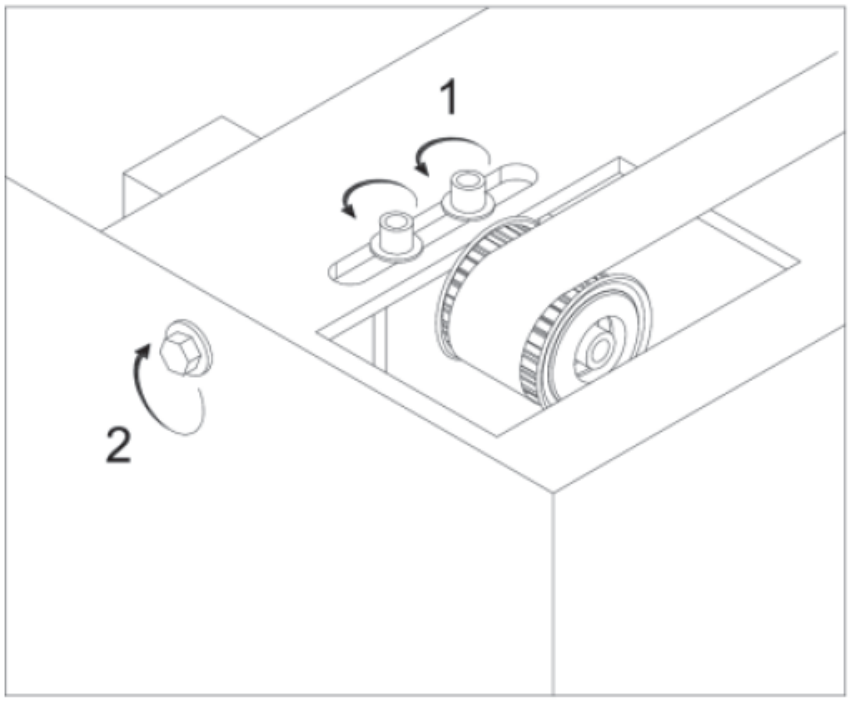

6.9 Guide Channel System

⚠ CAUTION

When changing the channel set, be sure the electrical power to the bar feeder is off.

⚠ CAUTION

The proper channel set to material diameter is important. Damage to the bar feeder and or the lathe may result.

⚠ WARNING

All channel sections must be in position prior to operation. Machine damage will occur if channel sections are not in the proper position.

The channel sets on the Scout may be changed to a variety of sizes. Make sure the material diameter in the bar feeder fits in the proper channel set. Channel set components are specific to each channel set. Contact Edge Technologies for additional channel sizes and sets.

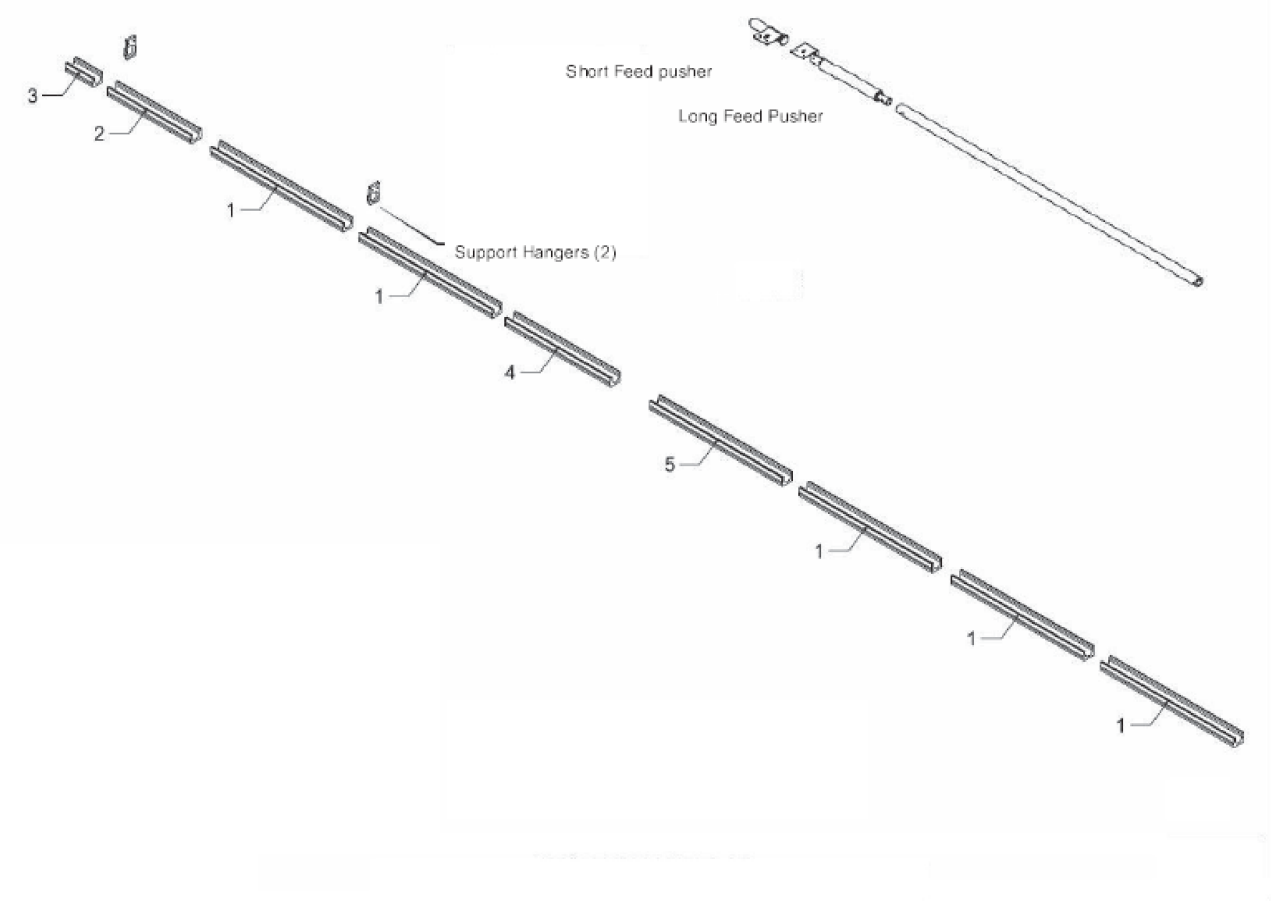

The guide channel is closed by an automated movable cover when the bar feeder is in operation. Hydraulic oil is injected into the channel and distributed all along the bar, which keeps it at the center of the guiding axis. The angled side of the bar feeder goes on the side of the carriage.

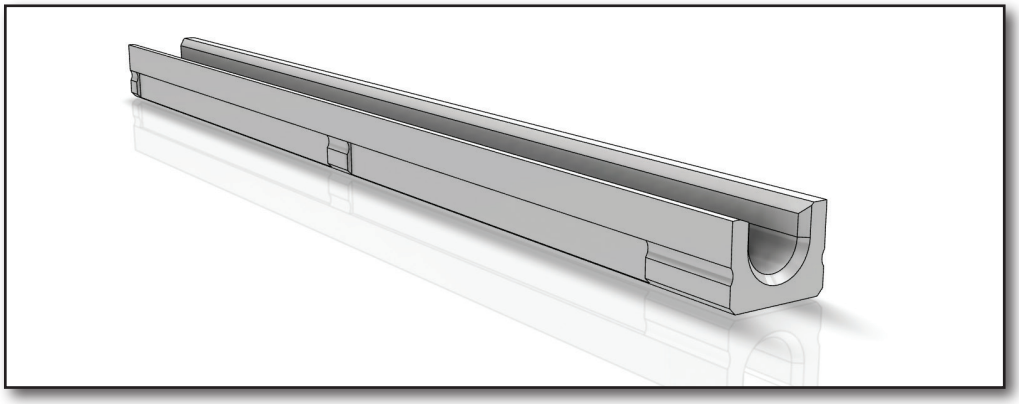

Standard Guide Channel

The short feed pusher screws must be cleaned of any oil, and a medium thread lock used. The screws should be replaced after a few times of being removed. The button head screw head can be stripped easily.

The pre-feed pusher flag should be flat. If the flat is bent, it should be bent back to flat or replaced. The mounting screws should be clean, with medium-strength thread lock used.

Note the short end is the material contact end.

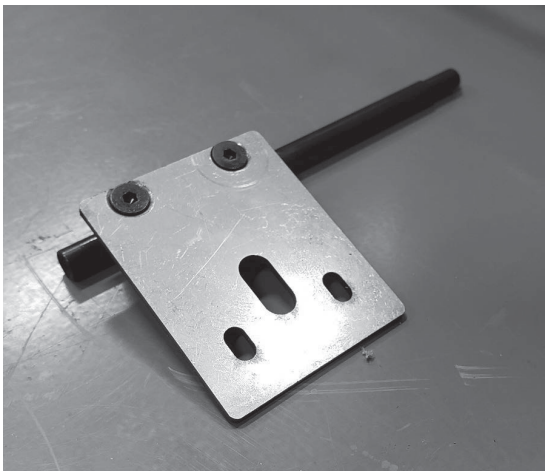

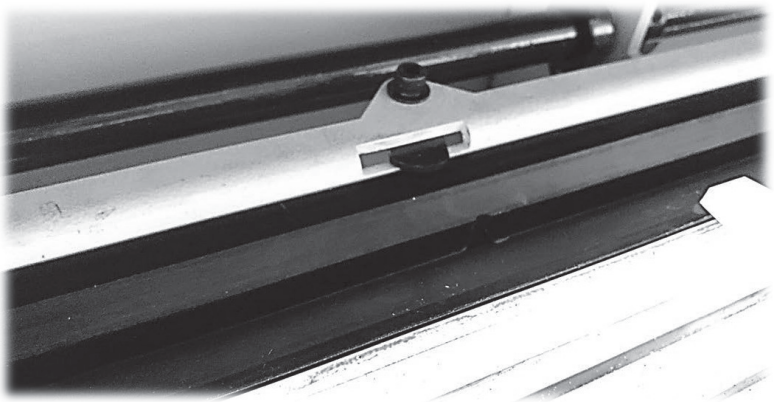

The lower channel sections fit into the aluminum channel structure. A small swivel plate keeps the sections from lifting. Be sure the plate is engaged over the channel section.

6.10 Push Lock Cylinder

⚠ CAUTION

Incorrect long feed pusher alignment in the pusher swing may cause pusher damage when lowering into the carriage.

The Scout uses an air cylinder to guide the long feed pusher flag into the carriage during pusher movement down. When the long feed pusher is reinstalled, the hole in the pusher flag must line up with the air cylinder shaft. If this alignment is incorrect, you may risk bending the pusher flag when the pusher swings into eh channel.

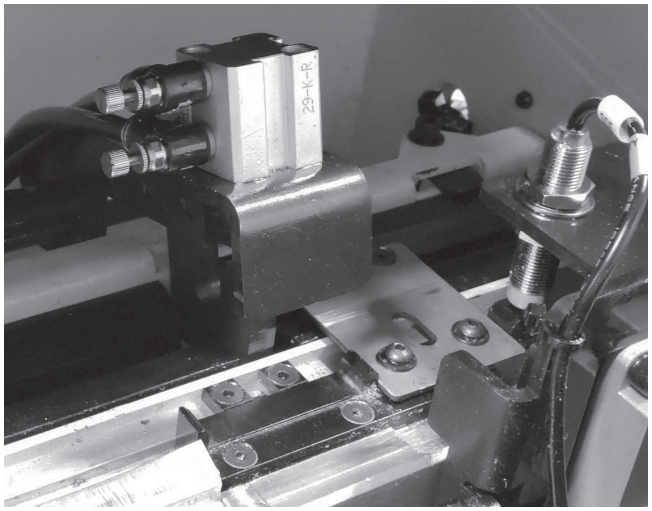

6.11 Measurement Flag

The measurement flag is an input to the PLC. When material moves forward during the pre-feed bar change process, the end of the bar makes contact with a steel flag. When this flag tips, it triggers the PLC to determine the length of the bar based on the current pusher location. To reset the sensor flag, a small throttle valve air controlled by the PLC pushes the flag back into measuring position.

If the measurement sensor is in the wrong state of position, bar changes will not occur.

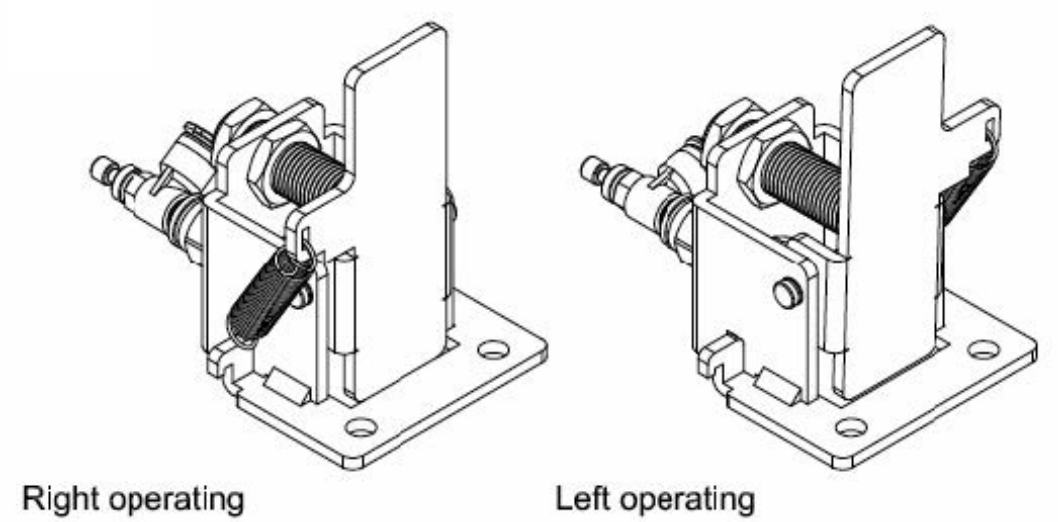

6.12 Gripper Assembly

⚠ CAUTION

The gripper is a pinch hazard. Its assembly is a moving component that should always be serviced with electrical power and air supply removed.

⚠ CAUTION

Place the lathe and bar feeder into Emergency Stop when replacing gripper jaws.

The gripper device is used to press material onto the bar feeder collet and remove remnants from the collet. Gripping force is determined by the air supply and is not adjustable to the assembly. The gripper jaws can be replaced as needed.

The gripper assembly slides forward and back while gripping the material. The amount of material insertion into the bar feeder collet is based on the pre-feed positioning of the material. If the material is placed farther from the gripper, the correct amount of material will not be inside the bar feeder collet. This may lead to material and bar feeder collet separation.

An issue may occur if the bar feed is too short when pre-feeding. The gripper will grip the bar stock and try to press it into the bar feeder collet. If the bar is too close, the gripper may slide on the bar stock or alarm out because of too much force. Adjust parameter P14 First Feed End Position Setup to fine-tune the press-upon and press-off.

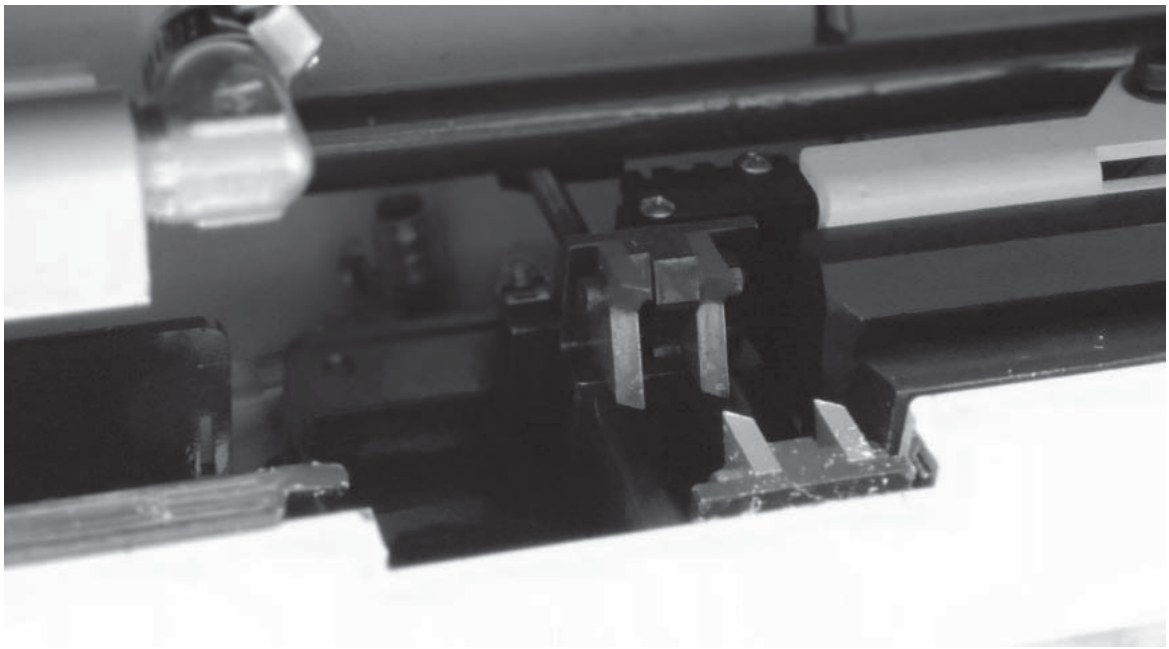

6.13 Material Standards and Requirements

NOTICE

The ends of the bar should be relatively straight to ensure proper positioning as the bar reaches the facing position and to keep the bar pusher from sliding off while feeding the material. In most cases, chamfering the front end of the bar is required. Using a spindle rotation of approximately 50 RPM during bar change maximizes reliability.

Material should be relatively straight and clean. Excessive chips, burrs or dirt may cause premature wear to the bar feeder channels. Clean bars will extend the life of the guide channel set and bearing unit of the pusher, as well as the oil pump impeller.

Bar ends should be relatively square to the length of the bar. Chamfer both ends of the bar stock to be machined. Profiled material such as hex and square stock should have a generous chamfer on the bar feeder end of the bar. This chamfer will help negate the offset of the bar centerline to that of the bar pusher when the stock falls differently into the channel (corners up versus flats up).

Bent bar stock may prevent loading of a new bar into the lathe spindle.

The procedure for bar straightness is:

1. Find a suitable surface to allow the bar to rest on V-blocks without any rocking movement.

2. Using a dial indicator, rotate the bar 360°. Record the readings at each location.

3. Calculate both the tolerance for each meter increment and the tolerance over the entire length of bar.

4. Compare the recorded values to the required tolerances to determine the bar suitability for operation with a bar feeder.

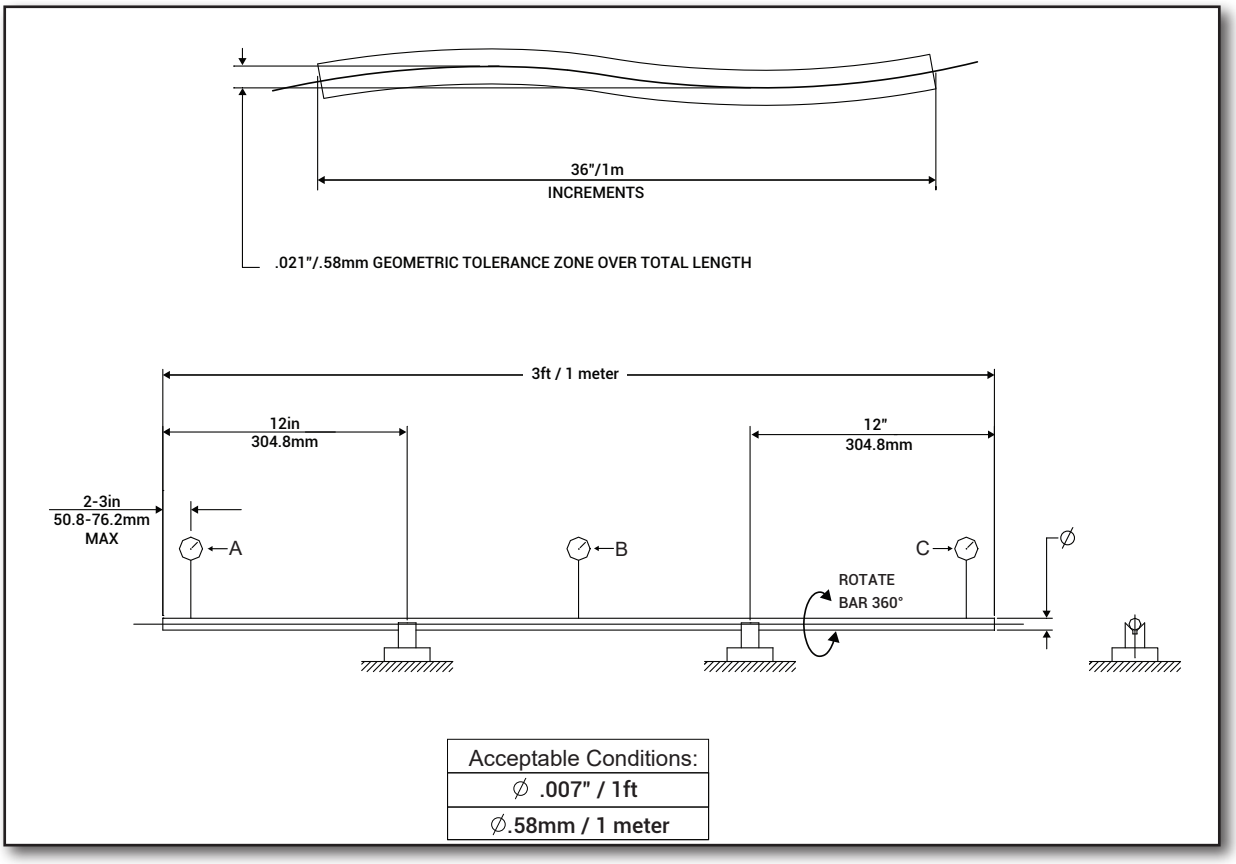

Straightness Requirements

Optimum performance of the bar feeder can only be achieved if the material meets specifications for straightness. The maximum allowable bend in a bar is 0.021” Total Indicated Run-off (TIR) per 3’ section (0.58mm TIR in a 1m section). This tolerance assumes a curvature over the length of the section and not a short kink. This tolerance is not accumulative.

Certain conditions may limit the lathe to less than full speed rotation of the spindle. Among these conditions are:

- Bent bars (bar stock with straightness of less than 0.5mm/1 meter)
- Bars with an irregular profile or shaped material
- Improperly sized guide channel in relation to the bar stock diameter
- Incorrect sizing of bushing blocks or incorrect adjustment of steady rollers
- Lack of support in the lathe spindle for the bar pusher
- Inherent characteristics of the type of bar stock (copper, brass, plastic etc.)
- Improper viscosity lubricant in the oil tank of the bar feeder
- Unbalanced bar stock
- Sheared bar ends rather than saw cut
- Non-concentric chamfered bar end when using an ejection collet

These factors may work alone or in combination to cause a vibration that requires a reduction in the lathe spindle speed.

6.14 Vibration Troubleshooting Check List

VIBRATION TROUBLESHOOTING CHECK LIST		
Bar Feeder Model	Serial Number	Lathe Model

TESTS TO BE CONDUCTED AND RECORDED		
	Comments and Feedback	
Bar Feeder Alignment		
1. Bar Feeder Alignment and Fastened		☐
2. Spindle Adapter Alignment and Condition		☐
3. Nose Alignment & Insert Conditions		☐
4. Stady Alignment		☐
5. MAVD Alignment		☐
Guide Channel Diameter		
1. Revolving Tip Condition		☐
2. Pusher-Collet Runout		☐
3. Pusher Straightness		☐
Material Type and Diameter		
1. Bar Straightness (See attached .007"/ft)		☐
2. Surface Finish		☐
Spindle Liner		
1. Tube Concentric to Journals (Max .004" or .1mm TIR)		☐
2. Fit with Spindle I.D.		☐
Other		
1. Confirm Oil Pump is on		☐
Lathe Influencing Factors		
1. Lathe Stability (not rocking on its pads)		☐
2. Work-Holding Runout & Chuck Pressure		☐
3. Guide Bushing Condition (Swiss Lathe)		☐
Additional Comments		
Technician's Name and Signature _____		

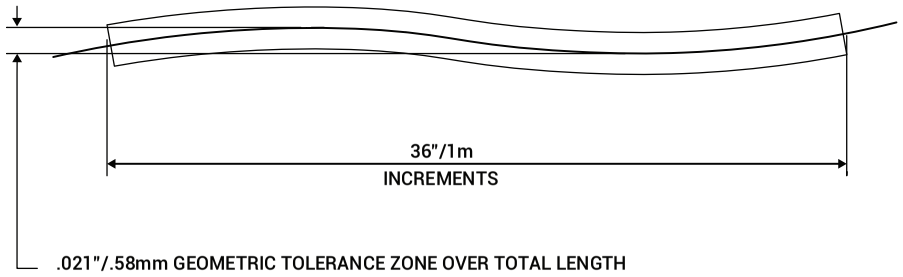

Recording Table

BAR #	READING "A"	READING "B"	READING "C"	ANALYSIS
1				
2				
3				
4				
5				
6				
7				
8				
9				
10				

Acceptable Conditions:
∅ .007" / 1ft
∅.58mm / 1 meter

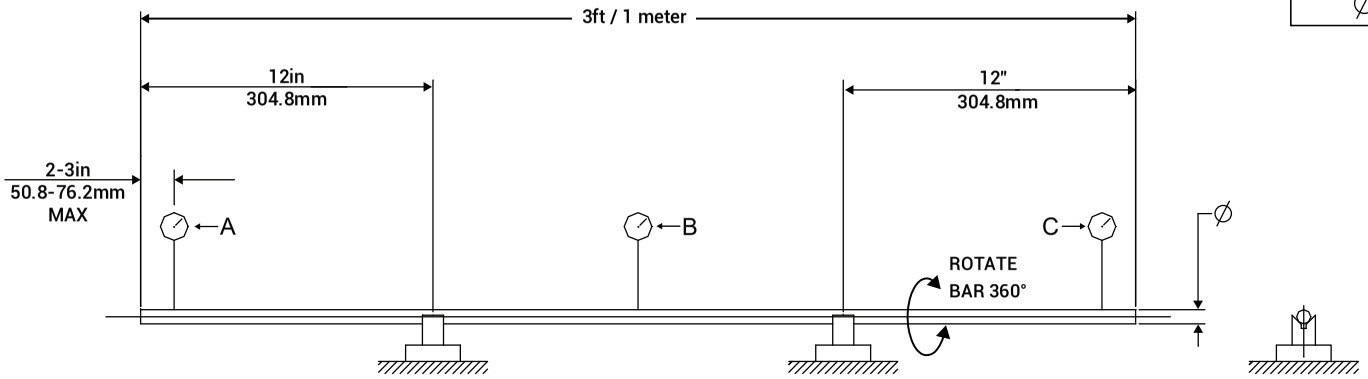

Procedure for checking bar straightness (Reference ASTM B249):

1. Find a suitable surface such that the bar can rest on the V-blocks without any rocking movement.
2. Rotate the bar 360°. Record the dial indicator readings at each location.
3. Calculate both the tolerance for each meter increment and also the tolerance over the entire length of the bar. Compare recorded values to required tolerances to determine the bar suitability for operation with a bar feeder.

ITEM	QTY.	DESCRIPTION	MATERIAL	PART NUMBER
NEXT ASSEMBLY				

THIRD ANGLE PROJECTION

EDGE TECHNOLOGIES

TOLERANCES METRIC (EXCEPT AS NOTED)
X ± 0.5
.X ± 0.25
.XX ± 0.1

BAR STRAIGHTNESS CONDITIONS

DRAWN BY J.S.
CHK'D BY
SCALE: 1:1
DATE: 06.15.99
DRAWING NO. Y24.M02.21
REV 2

7. Maintenance

7.1 Maintenance Chart

⚠ WARNING

Prior to bar feeder maintenance, turn off 3-phase power to the bar feeder and place the bar lathe into Emergency Stop. Prior to pneumatic system service, evacuate the system.

Observe the following:

- Perform maintenance checks regularly to ensure the bar feeder operates consistently.
- Keep the area around the bar feeder clean to avoid safety issues.
- Petroleum or other solvents can damage plastic component.
- Dust and wipe down the bar feeder with a mild cleaner each day.

Component	**Action**	**Frequency**				
		Hours			Regular	Period
		200	1250	2500	200	1250
Collet	Check wear	●				
Guide channel	Check wear and clean		●			
Feeding belt	Lubrication	●				
	Tension	●				
Air cleaner	Check				●	

7.2 Inspecting Pusher Collet and Revolving Tip

⚠ WARNING

The pusher collet and revolving tip are right next to the gripper. Make certain that the power supply is disconnected before attempting to inspect!

Check that the revolving tip (A) rotates smoothly and does not have excessive runout. If any problems are detected, replace the tip.

Check that the pusher collet (B) has the correct tension. The collet should press on a bar with some pressure required. The collet should be able to retain a proper length remnant. Inspect for cracks of pieces of material missing. Replace as required.

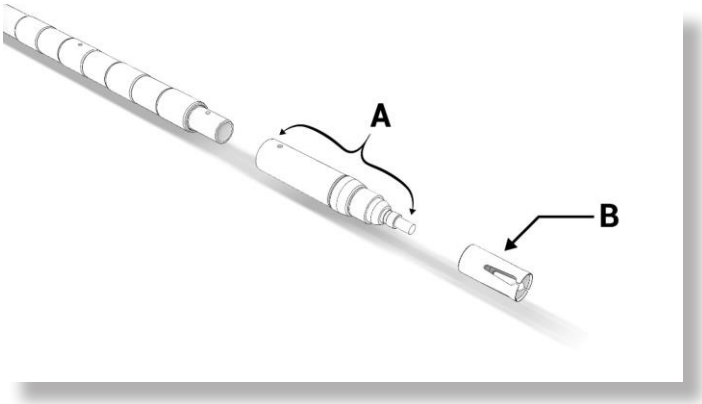

7.3 Inspecting Air Regulator

⚠ WARNING

Always use proper eye protection when working with compressed air systems.

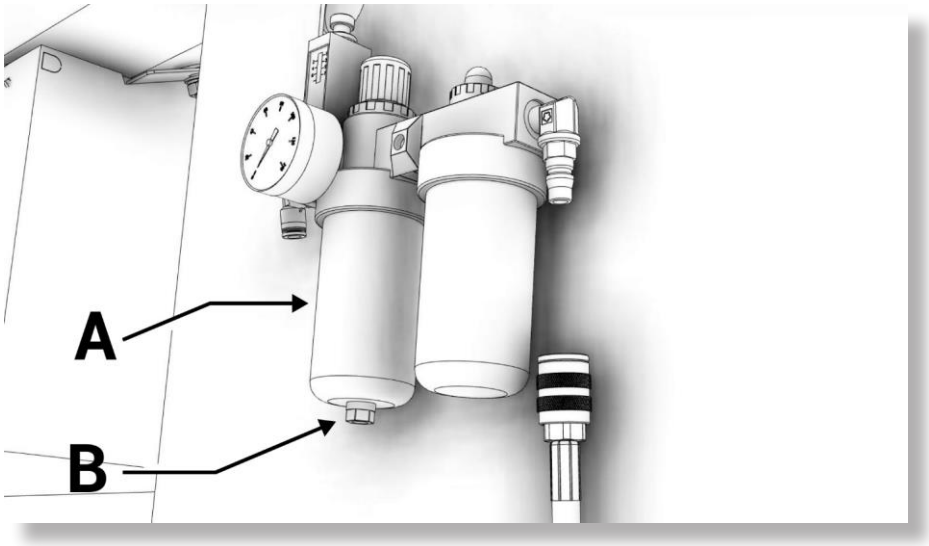

- Check the bottle (A) for water.
- Press button (B) to exhaust water out of bottle.

Inspect for the following and repair any issues that are found:

- Air leaks
- Cracks
- Oil level ok
- Secure mounting
- Proper air regulation is set

8. Control Operations

8.1 HMI Description

⚠ WARNING

Only trained personnel should operate the bar feeder.

The Scout bar feeder features a 7” full touchscreen HMI.

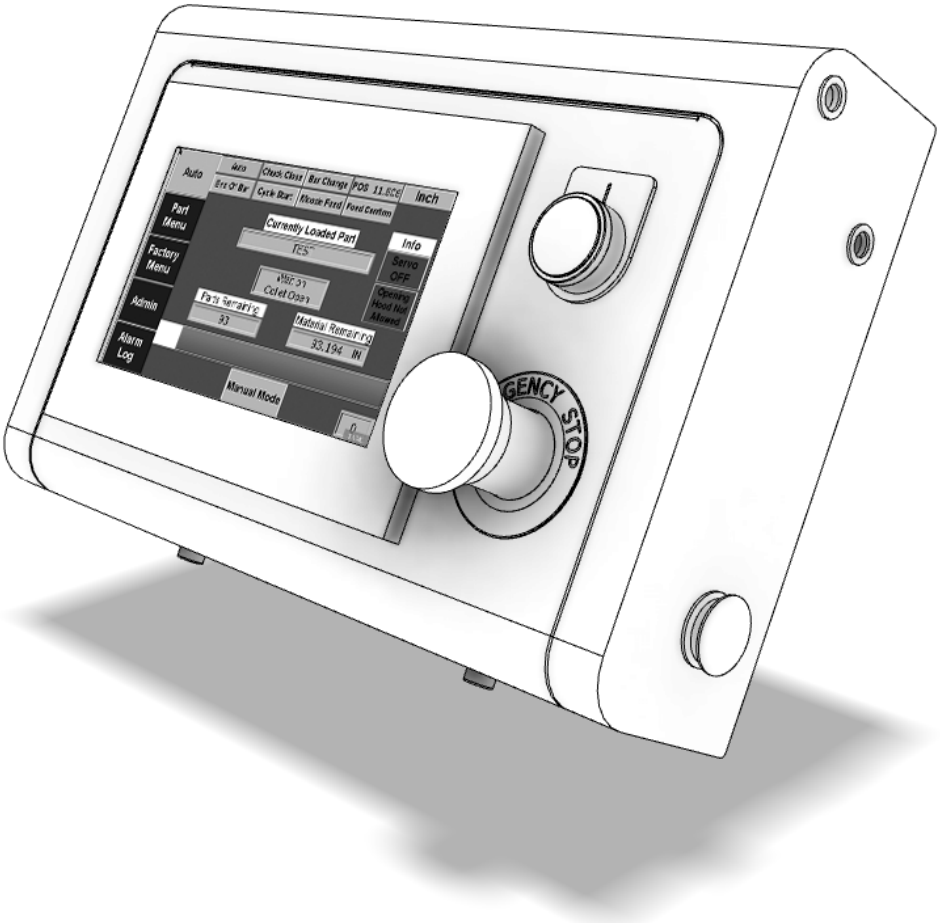

The HMI is a microprocessor-based, touchscreen unit that receives user input commands directly through the touchscreen. Understanding the function of the HMI is essential in operating the bar feeder.

NOTICE

Do not use harsh cleaning chemicals on the HMI screen. Use of a microfiber cloth towel and denatured alcohol is permissible. Clean the screen with the power off.

8.2 Manual and Auto Screen Layouts

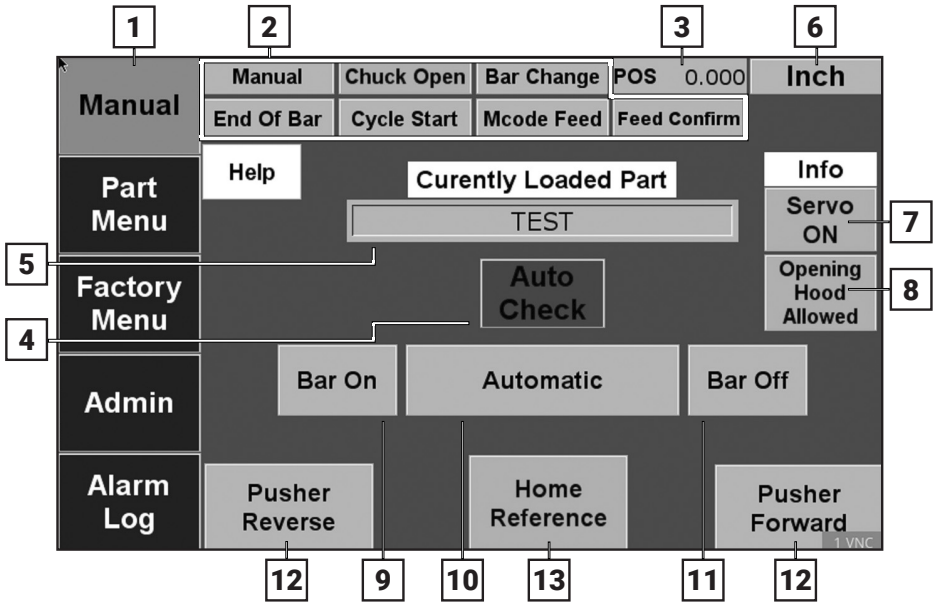

Manual Screen

1	Mode status = Manual or Automatic mode	7	Servo on/off indicator
2	Status of interface signals	8	Hood opening allowed indicator
3	Current pusher position	9	Bar on button
4	Auto Check. When green all conditions to go into auto are made. When red, press to see what conditions are missing.	10	Automatic button
5	Current part program	11	Bar off button
6	Current unit of measurement. Tap to change between metric and inches. This can be done at any time	12	Jog pusher buttons
		13	Home Reference button

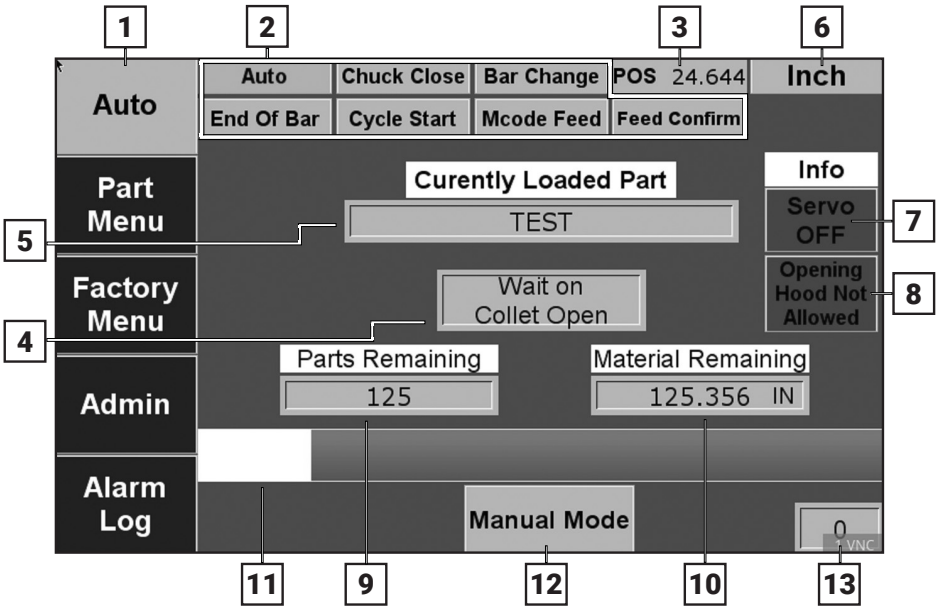

Automatic Screen

1	Mode status = Manual or Automatic mode	7	Servo on/off indicator
2	Status of interface signals	8	Hood opening allowed indicator
3	Current pusher position	9	Parts remaining indicator
4	Current script item	10	Material remaining indicator
5	Current part program	11	Material remaining visual indicator
6	Current unit of measurement. Tap to change between metric and inches. This can be done at any time	12	Manual mode button
		13	Current step number

8.3 Handheld Pendant Layout

NO.	Function
1.	Emergency Stop
2.	Alarm Light
3.	Cycle Start Light
4.	Bar End Light
5.	Collet Open Light
6.	Bar Change Light
7.	Feed Stop Light
8.	Automatic Start Light
9.	Automatic Start
10.	Manual Mode Light
11.	Manual Mode
12.	Pre Auto Light
13.	Pre Auto
14.	Channel Down Light
15.	Manual Loading
16.	Pusher Extracted
17.	Manual Insert/Extract
18.	Grippers Closed Light
19.	Manual Loading
20.	Pusher Home
21.	Manual Retreat (Left)
22.	Channel Open Light
23.	Manual Channel Open/Close
24.	Pusher Home (reversed)
25.	Manual Advance (Right)

8.4 Power Up

⚠ DANGER

Improper use of the electrical cabinet can result in electrocution and damage to the machine.

1. Have the bar stock in the bar feeder magazine and the lathe ready for production to power up and place the bar feeder in Automatic mode.

2. Turn the main breaker switch on from the bar feeder electrical cabinet.

3. Make sure the Emergency Stop buttons on the pendant and the main control panel are released.

4. Press and hold the green On button on the main control cabinet. The green button will light when the bar feeder is on.

5. Close the collet on the lathe.

6. Press the Automatic button on the touchscreen to place the bar feeder in Automatic mode. Reference the Auto Check screen for all conditions that must be met before pressing the Automatic button.

8.5 Advance / Retreat at Low Speed

To advance at low speed, press and .

To retreat at low speed, press and .

8.6 Automatic Work Operation

Press the automatic button on the touchscreen, or press Pre-Auto and then Auto on the handheld pendant, to place the bar feeder in Automatic mode. Reference the Auto Check screen for all conditions that must be met before pressing the automatic button.

8.7 Resetting the Bar Feeder Home Position

Press the Home reference button.

Once the Home switch turns on, the Home reference indicator will turn from red to green. It is still possible to reference when the indicator is green.

This procedure should be done any time the bar feeder fails to properly reach a position, or the Home Reference Lost alarm occurs.

8.8 Loading with the Bar On and Bar Off Buttons

NOTICE

Do not use Bar On if a bar is already in the bar feeder. Doing so will cause damage to the machine.

Bar On

A new bar can be loaded by using the Bar On button. The lathe collet must be open for Bar On to function. The channel must be open, the chuck must be open, and the pusher must be extracted.

1. Press the Bar On button.
2. The grippers will close on the bar, but only if a bar is present. There need not be a bar in the channel at this step.
3. A new bar will fall into the guide channel.
4. The pre-feed pusher will move the bar forward ahead of the pusher collet.
5. The pre-feed pusher will retract and the channel will close.
6. The grippers will hold the bar as the pusher collet is forced over the material.
7. The grippers will open and the bar will move forward to the facing position and stop.
8. Manually close the lathe collet. The bar feeder can now be placed in Automatic, and machining may begin.

Bar Off

If the material in the channel is too long to drop through the remnant slot, use the Bar Off button.

1. Press Bar Off.
2. The bar pusher will retract to the Home reference position.
3. The grippers will close on the bar, and the pusher will pull off the material.
4. The grippers will open.
5. The grippers will close again to check for material.
6. The grippers will reopen.

9. Parameters

9.1 Parameter Pages and Definitions: Part Menus

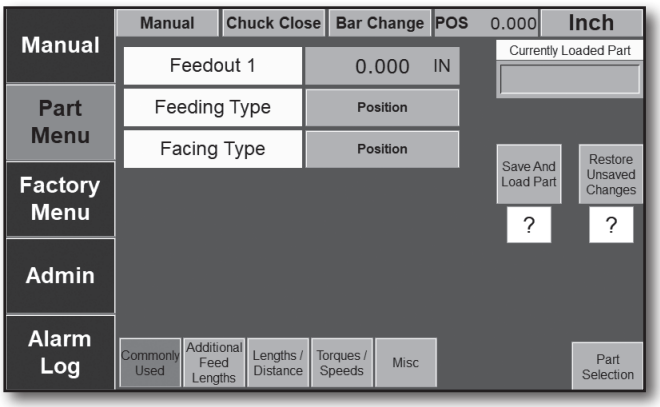

Feedout 1: When only using one feedout, this is the part length. If you wish to use multiple feedouts, modify the values in the Additional Feed Lengths screen. Calculate the proper setting by adding the length of part + width of cut-off tool + facing stock. Used with Max End of Bar Position, Feedout 1 generates an end-of-bar signal (Max Feed Position – Part Length 1).

Feeding Type: Feeding Type selects the mode for feeding material in Automatic mode. If you select Position, the bar feeds to positions specified by part lengths. Turret Stop feeds until the bar feeder detects the bar has hit At Feed safeties, for higher reliability.

Facing Type: The Position selection feeds the bar to a position. This position is controlled by Facing Position (Factory Menu), Facing Length (Part Menu), and Chuck Jaw Length (Part Menu). Turret Stop feeds the bar until the bar feeder detects the bar has hit a hard stop.

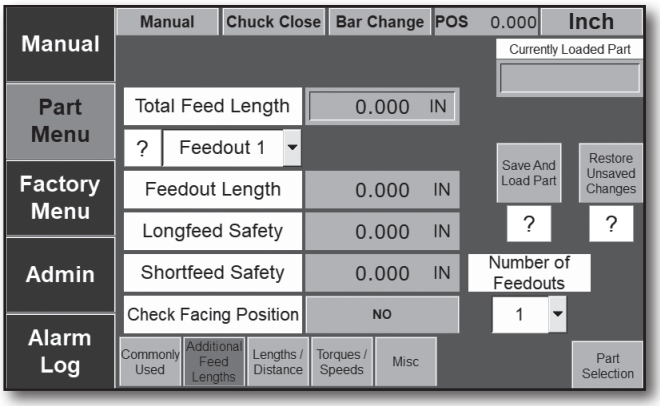

Total Feed Length: This sets the total length of the part to be machined. This value is not entered but calculated from the sum of each feedout and is used to calculate parts remaining.

Feedout 1: Select which feedout you wish to modify. The bar feeder will feed these out in order.

Feedout Length: The length will feed out for the feedout number selected above.

Longfeed Safety: This is an incremental value. If the bar feeder attempts to feed a part but exceeds the position it expected to feed out by this amount, the bar feeder will alarm out.

Shortfeed Safety: This is a decremental value. If the bar feeder attempts to feed a part but comes up less than the expected feedout position by this value, the bar feeder will alarm out.

Check Facing Position: This uses the longfeed and shortfeed safeties to check that the new bar was fed to the correct facing position (Factory Menu). With this option disabled, the bar feeder will still alarm out if the position is off by more than an inch.

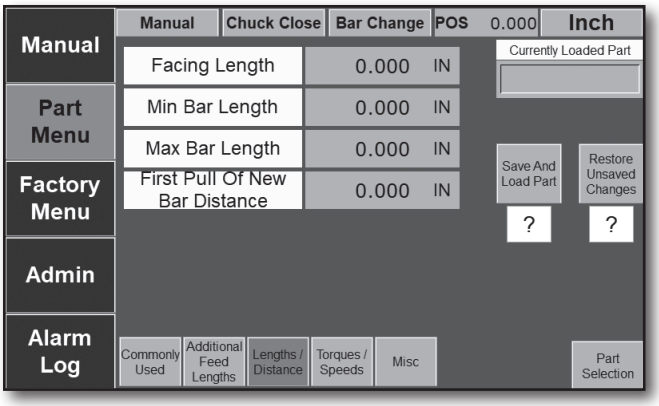

Facing Length: The additional length the bar will be fed after the facing position is reached.

Min Bar Length: If a bar is measured at less than this length, the bar feeder will alarm out. Setting this properly will help with process reliability.

Max Bar Length: If a bar is measured at more than this length, the bar feeder will alarm out. Setting this properly will help with process reliability. This value also allows the bar to be measured faster, as the bar feeder will quickly push the bar to a calculated distance before the flag, at which point it will slow down to the bar measurement speed.

First Pull of New Bar Distance: When a new bar is loaded, the bar feeder will expect the bar to be pulled this distance for Swiss-type applications. This is useful, as the lathe can load the bar into the guide bushing without requiring the distance to be the same as the part length. On fixed headstock machines, the bar feeder makes the first feed of the new bar this distance for position/torque mode feeding before feeding out parts.

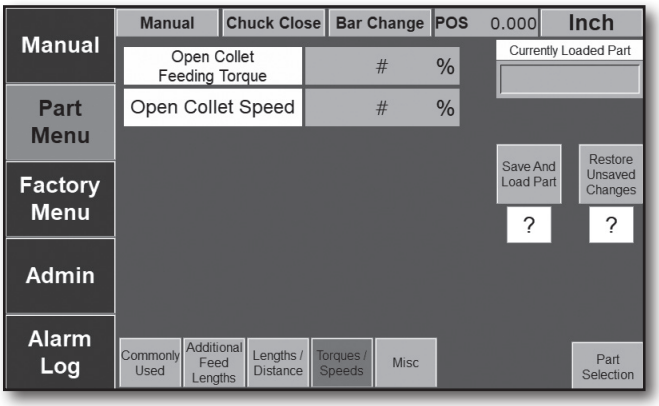

Open Collet Feeding Torque: This represents the maximum possible torque when feeding the bar into the lathe. Larger bars may need higher torque. If the torque is set too high for thin bars, it is possible to bend the bar and subsequently break a tool during machining.

Open Collet Speed: This represents the speed that the bar will be fed into the lathe.

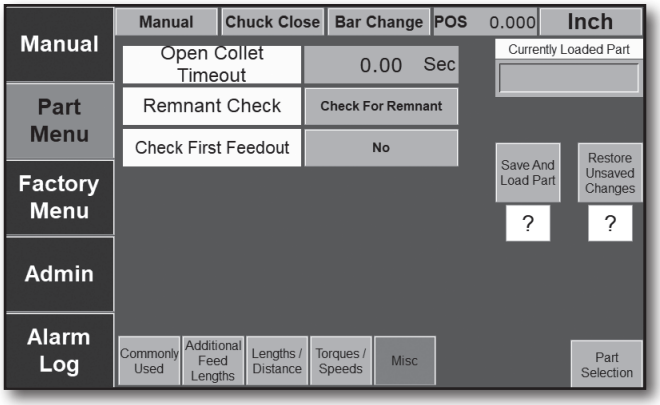

Open Collet Timeout: When the bar feeder is in automatic, if the lathe collet is open for longer than the open collet timeout, the bar feeder will alarm out.

Remnant Check: By choosing Check for Remnant, when the pusher returns to do a bar change, the grippers will verify that a remnant is left in the bar feeder collet and not in the lathe or channel. Do Not Check For Remnant is used when either a loose-fitting collet or no collet is used to eject the part out of the front of the lathe with a new bar. The bar feeder will not alarm out when no bar is detected by the grippers.

Check First Feedout: Ignores longfeed and shortfeed safeties on the very first feedout when going into automatic. This is mostly intended for Swiss machines that do an initial cutoff when going into automatic after the z axis was moved. This option is disabled when feeding into position.

9.2 Parameter Pages and Definitions: Factory Menus

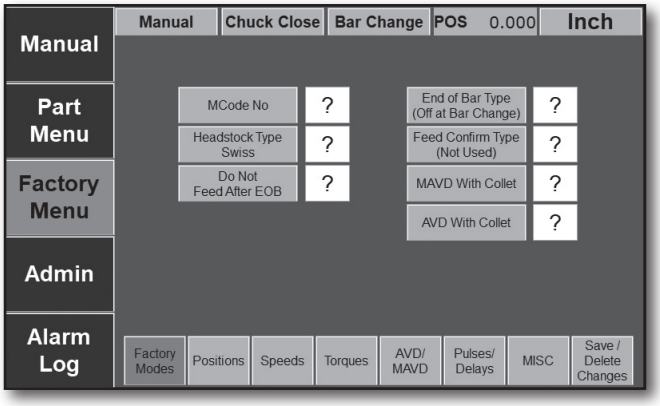

MCode Yes/No: MCode Feed commands the bar feeder to feed the bar. If MCode is set to yes, when the collet opens, the bar feeder will require the MCode feed signal (sent from the lathe) to feed a part. If MCode is set to no, the bar feeder will feed as soon as the collet opens (as long as the feed stop signal is off).

Headstock Type Swiss/Fixed: This sets the type of lathe the bar feeder is connected to, enabling/disabling the synchronization system, and makes other changes to the bar feeder.

Do Not Feed After EOB: When set to Feed After EOB, this leaves the lathe in charge of when to change the bar. The bar feeder will keep feeding parts until the lathe sends the bar change signal. This is normally not recommended but can be useful if the lathe does not have a second EOB signal.

End of Bar Type: Pulse enables the pulse timer for the end of bar. Latch, which is used for most lathes, turns the end-of-bar signal on until the bar change is complete. Double Pulse does 2 pulses instead of one to improve signal reliability on lathes where a single pulse is unreliable (extending the pulse timer can also help). Off at Bar Change sends the signal until the lathe responds with a bar change signal, then shuts off the end-of-bar signal.

MAVD With/Without Collet: MAVD With Collet indicates the MAVD will open and close with the lathe collet signal. MAVD Without Collet indicates the MAVD will always remain closed.

AVD With/Without Collet: AVD With Collet indicates the AVD will open and close with the lathe collet signal. AVD Without Collet indicates the AVD will always remain closed.

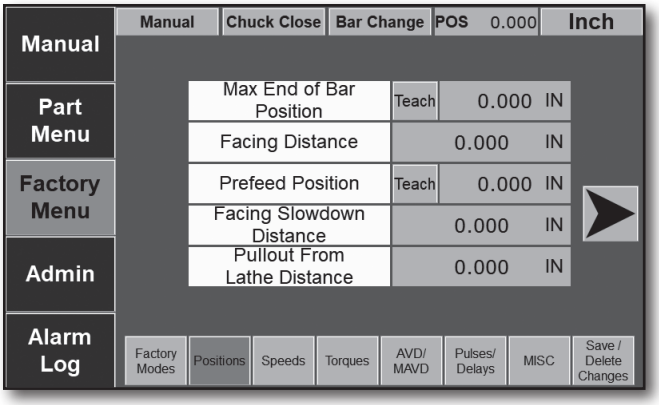

Max End of Bar Position: This is the maximum position of the pusher when feeding the bar into the lathe. It is used to ensure that the chuck jaws are gripping enough material to machine a new part.

Facing Distance: This is the distance from the measurement flag to the face of the lathe collet or chuck. If there is a value entered in Facing Length (Part Menu), that will extend this position.

Prefeed Position: This is the position to which the prefeed pusher will advance each new bar to be gripped and pressed onto the pusher collet.

Facing Slowdown Distance: At this position, the bar will start feeding slower before tripping the measurement flag to ensure a more accurate position of the bar in the spindle, and to help with feeding reliability.

Pullout From Lathe Distance: This is the distance the pusher will retract in a slower and higher torque state to get the bar sufficiently out of the spindle before pulling back at bar change return speed.

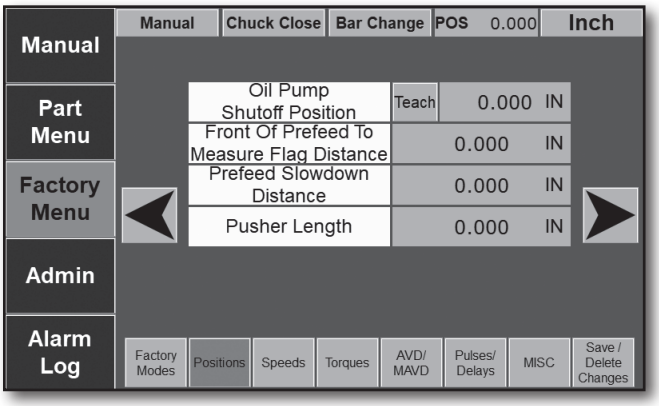

Oil Pump Shutoff Position: This is the position to shut off the oil pump. This position should be after the pusher collet has moved past the guide channels. Setting this position too far could result in undesired oil transfer to the lathe.

Front of Prefeed to Measure Flag Distance: This is the distance between the front of the prefeed pusher at the prefeed position and the measurement flag. This value is needed to calculate the bar length. This can be adjusted by small amounts if the bar length is slightly off to compensate for differences in sensors.

Prefeed Slowdown Distance: This is the distance before the prefeed position where the bar feeder will slow down the prefeed pusher to prevent the bar sliding in the channel. This helps to ensure the accurate measurement of a newly loaded bar.

Pusher Length: This parameter is the length of the pusher. It is used to help make the bar measurement more accurate. This value is measured from the tip of the pusher to the front of the prefeed pusher.

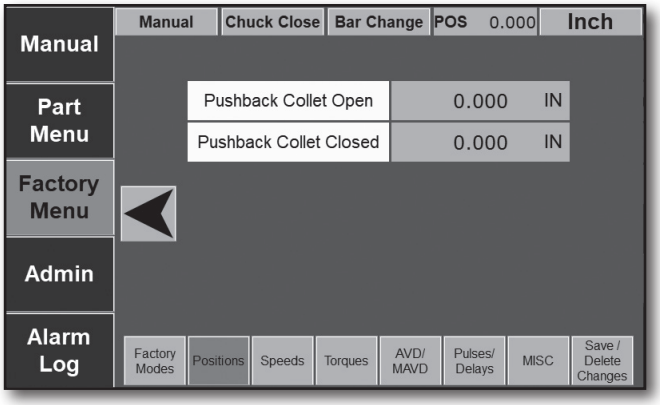

Pushback Collet Open: When the collet is open, if the pusher is forced back more than this amount, the bar feeder will alarm out. A value of zero will ignore this alarm. It is mostly used for Swiss-type applications.

Pushback Collet Closed: When the collet is closed, if the pusher is pushed back further than this amount, the bar feeder will alarm out. A value of zero will ignore this alarm. It is used exclusively for fixed headstock applications.

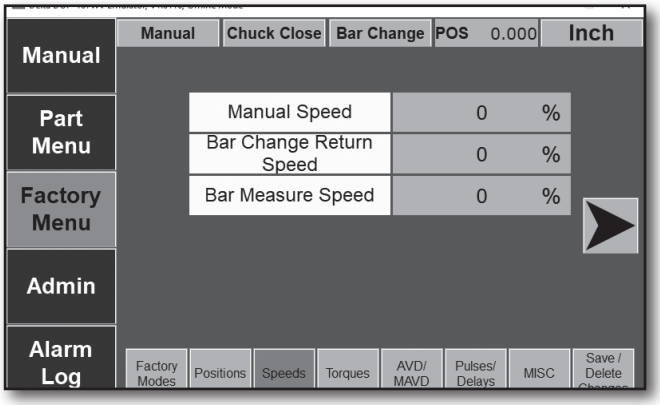

Manual Speed: While in manual mode, this is the speed the pusher will move when the left/right arrow buttons on the handheld pendant are pushed.

Bar Change Return Speed: After the lathe sends the bar change command, the pusher will travel to the Home reference position at this speed.

Bar Measure Speed: This parameter controls the speed at which the bar will be measured as it trips the measurement flag. Slower is more accurate. After the bar is measured, the (prefeed) pusher will change to the facing speed.

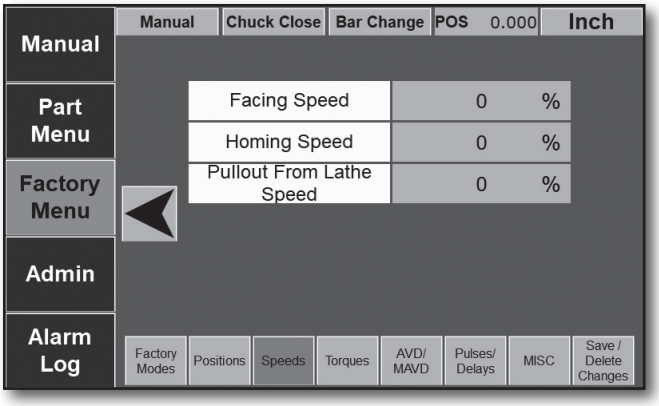

Facing Speed: This is the pusher speed before the bar reaches a point it can be measured (controlled by maximum bar length) and after a bar has been measured.

Homing Speed: This is the speed the pusher travels when trying to find the Home reference position. Slower speed prevents the pusher from slamming into the back of the machine.

Pullout From Lathe Speed: When executing a bar change, the bar feeder will pull out the remnant from the lathe at this speed before moving at the bar change return speed. This ensures that the remnant does not come off the pusher collet during remnant extraction.

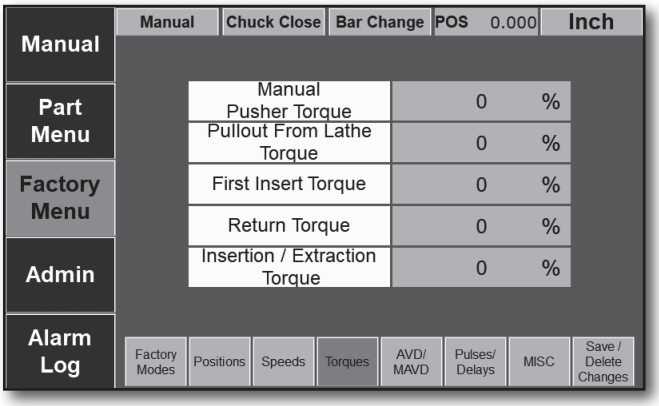

Manual Pusher Torque: This is the max torque the pusher will exert when doing manual moves.

Insertion / Extraction Torque: This is the torque used to assist the cylinder during insertion and extraction.

Pullout From Lathe Torque: When pulling the remnant out of the lathe, the bar feeder will use this torque until the pusher has pulled back the distance entered in the pullout from the lathe distance parameter (see Factory Menu).

First Insert Torque: This is the torque used when a new bar is pushed through the lathe collet after a bar change.

Return Torque: This is the torque used when the pusher is returning home.

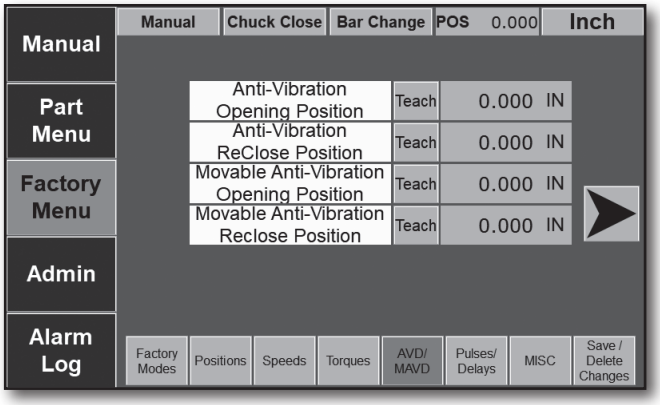

Anti-Vibration Opening Position: At this position, the first AVD will open. This position should be before the pusher collet reaches the first anti-vibration device.

Anti-Vibration Reclose Position: At this position, the AVD will reclose on the pusher. This stabilizes the pusher and helps reduce vibration. This position should be after the pusher collet passes fully through the AVD.

Moveable Anti-Vibration Opening Position: At this position, the MAVD will open. This should be before the pusher collet reaches the MAVD.

Moveable Anti-Vibration Reclose Position: At this position, the MAVD will reclose on the pusher. This stabilizes the pusher and helps reduce vibration. This position should be after the pusher collet passes fully through the MAVD.

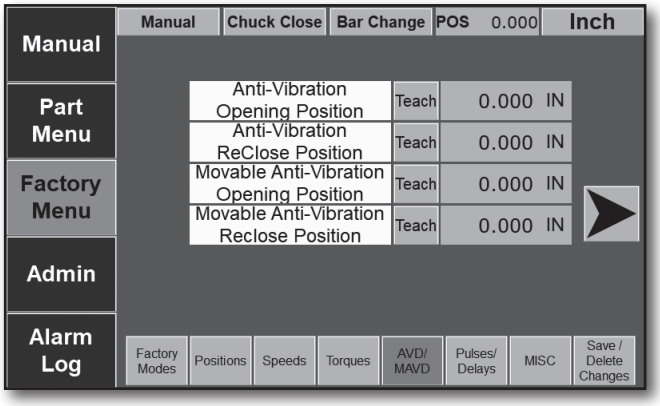

1st Channel Opening Position: Set the opening position of the first channel.

2nd Channel Opening Position: Set the opening position of the second channel.

3rd Channel Opening Position: Set the opening position of the third channel.

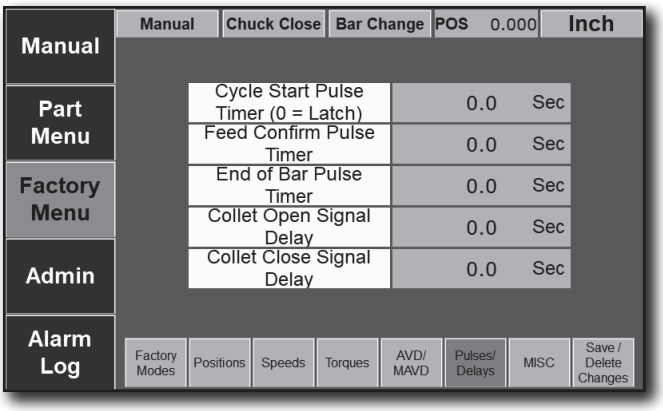

Cycle Start Pulse Timer: This sets the amount of time to keep on the cycle start signal. 0 is latch. The bar feeder will wait for the collet to close before turning the signal off.

Feed Confirm Pulse Timer: This sets the amount of time to keep on the feed confirm signal. 0 is latch. The bar feeder will wait for the collet to close before turning the signal off.

End of Bar Pulse Timer: This sets the amount of time to keep on the end-of-bar signal. Most lathes use a latch and not a pulse, so this should usually be 0 (latch). When set to 0, the bar feeder will wait for the collet to close before turning the signal off.

Collet Open Signal Delay: The bar feeder will delay the collet open signal it receives from the lathe.

Collet Close Signal Delay: The bar feeder will delay the collet close signal it receives from the lathe.

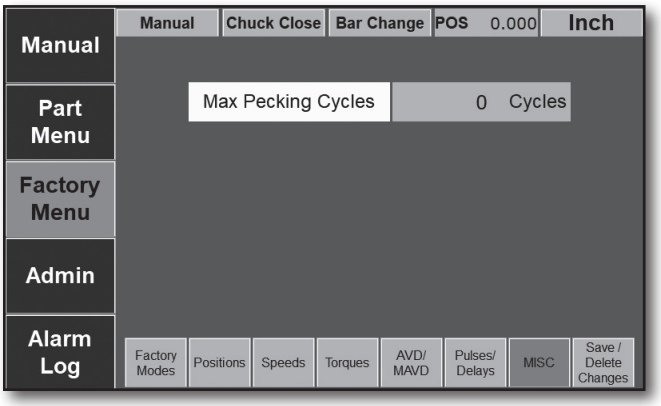

Max Pecking Cycles: When feeding the bar into the spindle, if the bar feeder detects the bar is stuck, it will “peck” the bar the number of times in this parameter by repeatedly backing up and pushing again. If the bar is still stuck after pecking this many times, the bar feeder will alarm out.

9.3 Parts Programming: Loading an Existing Part

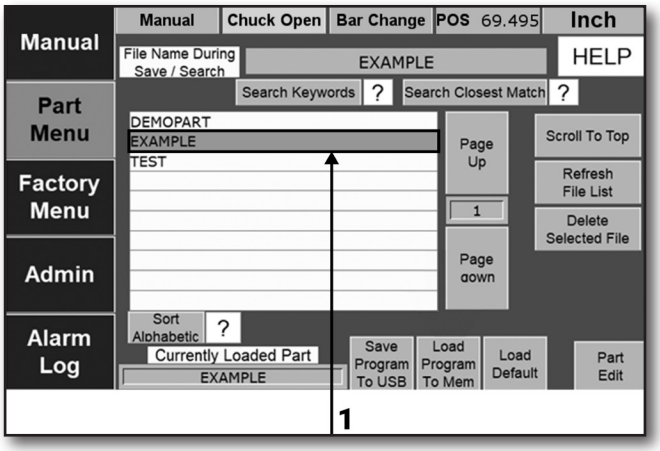

Select a part from the Part Menu. (**1**)

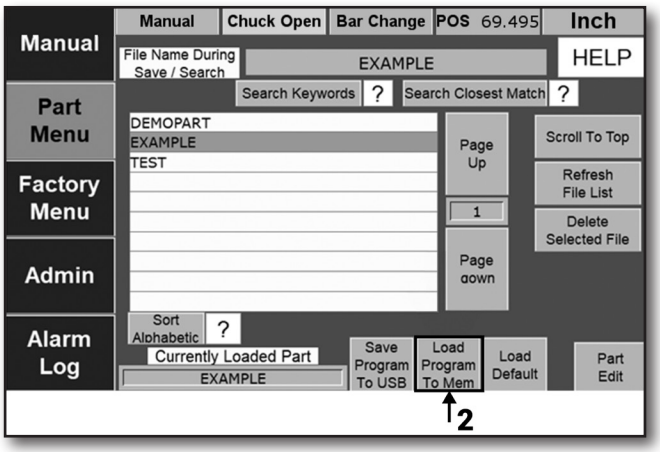

Press “Load Program to Mem.” This copies the part from the USB drive into the PLC memory. (**2**)

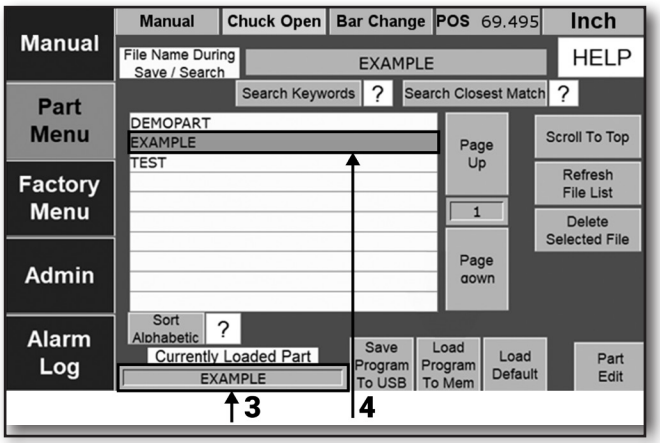

The “Currently Loaded Part” (**3**) will update to show the part that was just loaded. (**4**)

9.4 Parts Programming: Loading an Existing Part

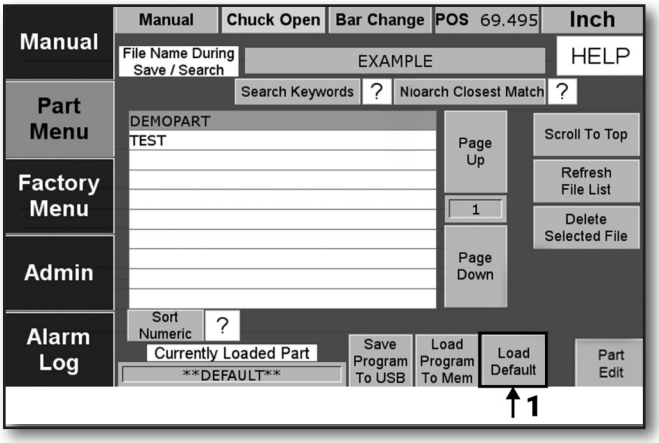

Press "Load Default." This will load parameters for the default part that was created after the machine was installed. The default part can be changed from Admin -> Save Default Part. (**1**)

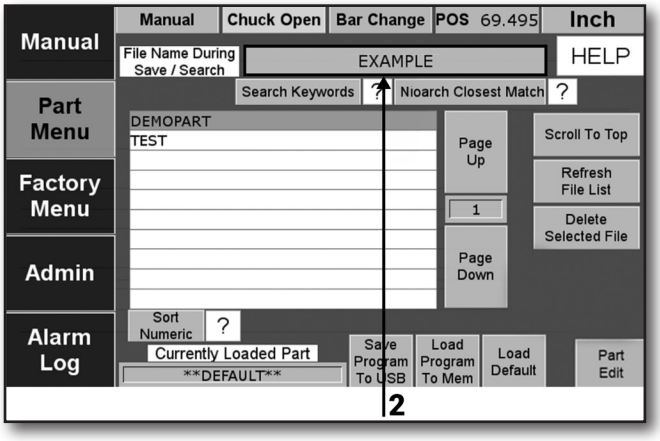

Enter the name you want the part to be called. (**2**)

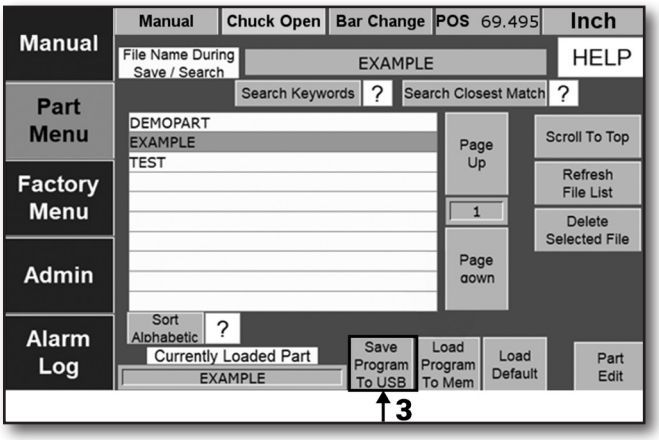

Press "Save Program to USB." This will create a part file on the USB drive with the name entered. (**3**)

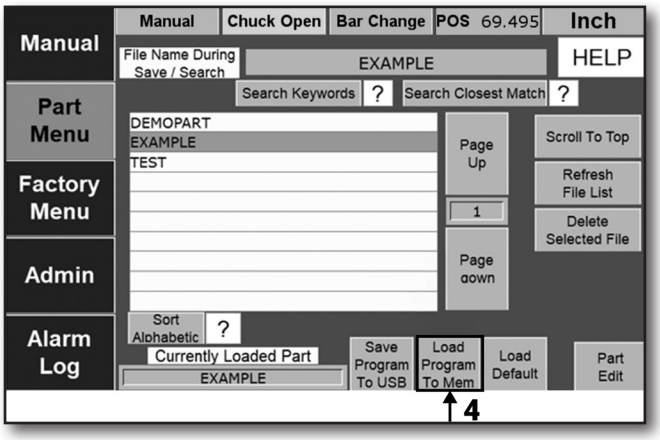

Press "Load Program to Mem." This will load the newly created part file into the PLC. (**4**)

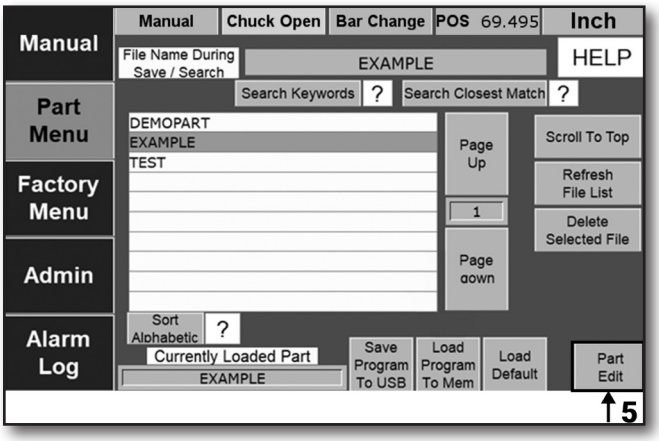

Press "Part Edit." (**5**)

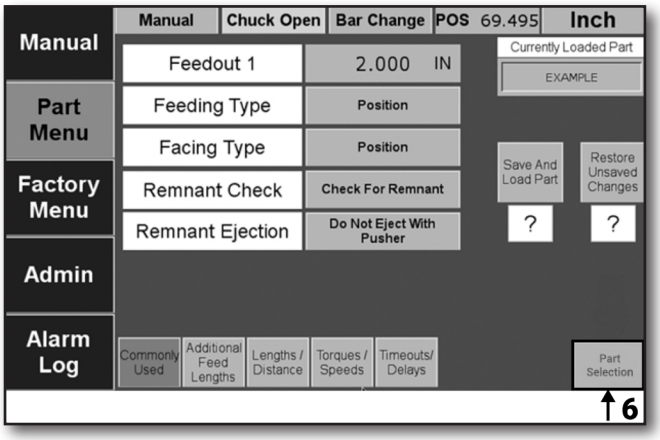

Edit your part parameters. Notice a red message "Current Part Not Saved." Press the "Save and Load Part" button. This will save the part to the USB drive as well as update the part in the PLC. (**6**)

9.5 Parts Programming: Loading an Existing Part

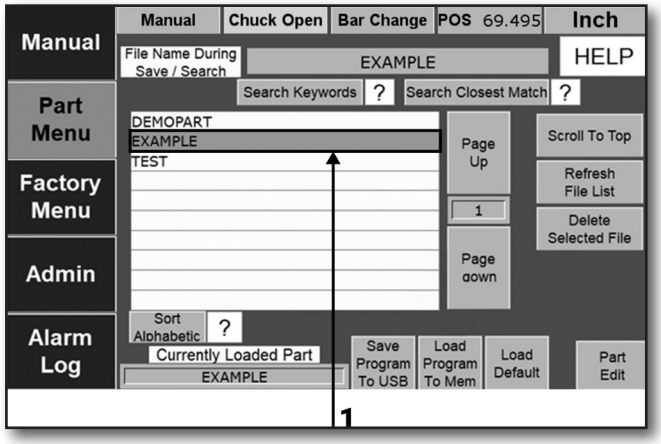

Select a part from the Part Menu. (**1**) If the part is already loaded, skip to step 4.

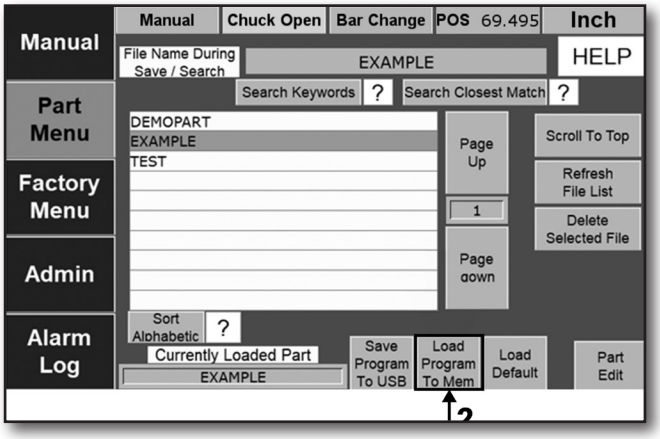

Press "Load Program to Mem." This copies the part from the USB drive into the PLC memory. (**2**)

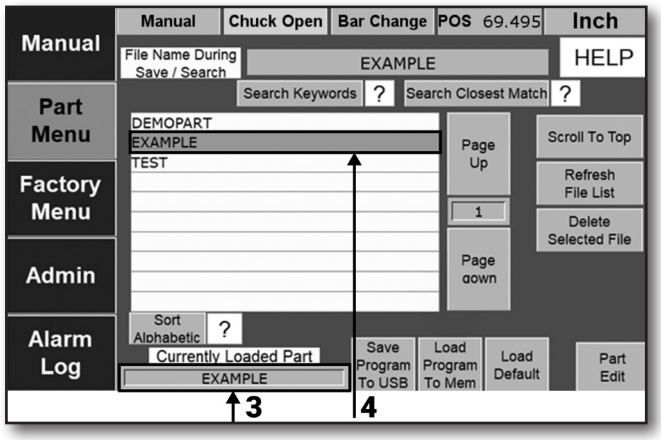

The "Currently Loaded Part" will update (**3**) to show that the part that was just loaded. (**4**)

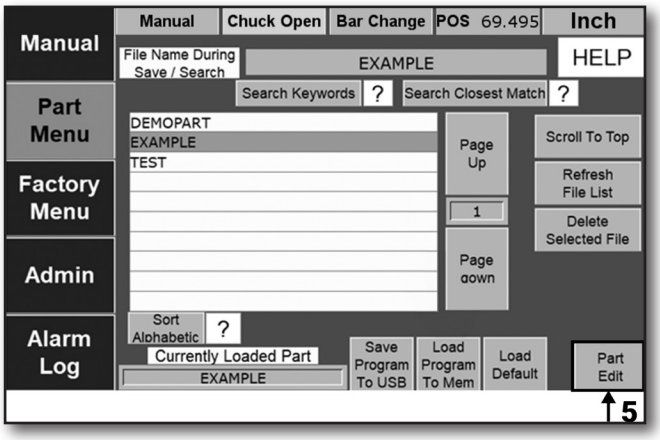

Select Part Edit. (**5**)

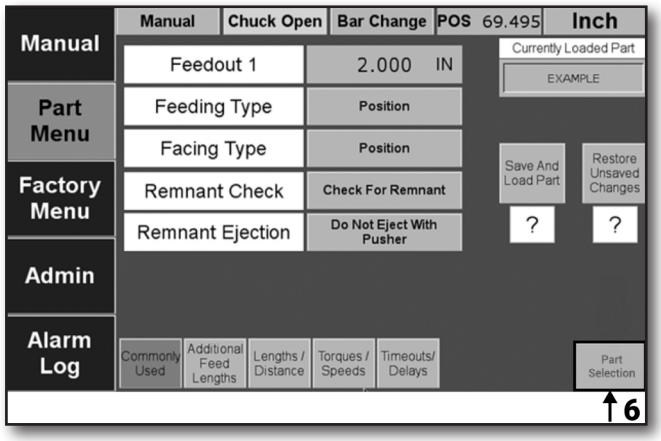

Edit your parameters. Select Part Selection. (**6**)

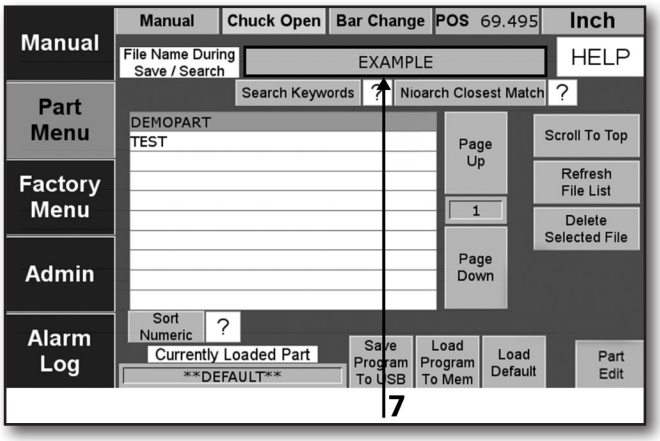

Enter the name of your new part. (**7**)

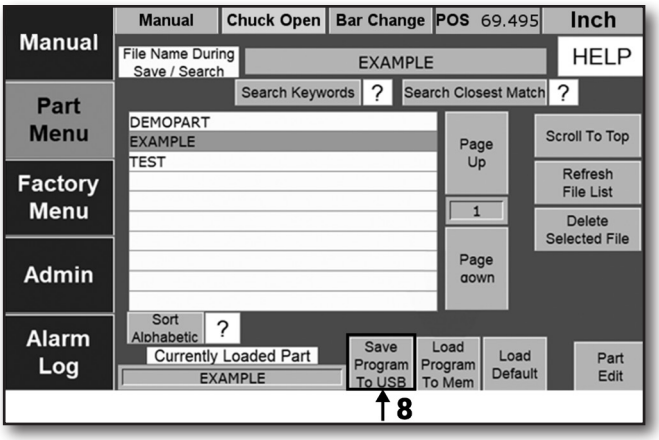

Press “Save Program to USB.” (**8**)

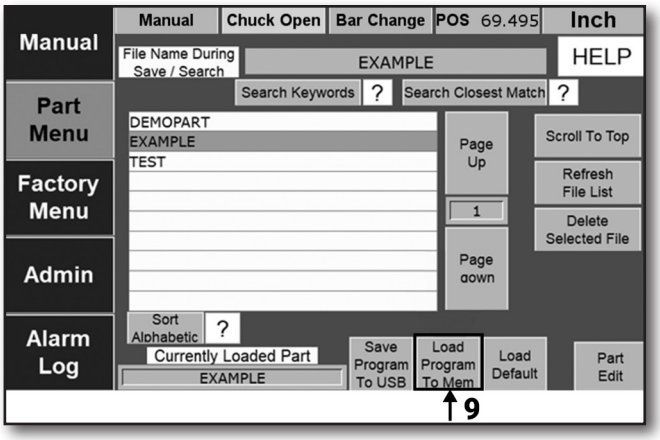

Press “Load Program to Mem.” (**9**)

9.6 Parameter Pages and Definitions: Admin Menus

Level	Password
0	00000000
1-Part Loading	258
2-Part Edit	235
3-Factory Menu	88
4-User Admin	11600116

10. Alarms

10.1 Alarm Table

⚠ DANGER

Only a qualified electrician or serviceman should perform electrical troubleshooting or maintenance to this equipment.

Alarm Name	Possible Cause	Sensor
Emergency Stop	The E-stop is pressed in, or the green button has not been pressed since power up. • Make sure the lathe is not in alarm other than a bar feeder alarm. • Release E-stop on the bar feeder pendant. • Release E-stop on the bar feeder control panel. • Press green button. • Ensure synchronization switches are not pressed. • Some applications require power cycling both machines to clear Emergency Stop.	E-stops ES1 and ES2. Synchronization Switches LS41 and LS51.
Bar Too Long	The bar feeder measured a bar that was longer than the maximum bar length parameter (see Part Menu, Section 8.1). • Ensure the measurement sensor is working properly. • Verify the Max Bar Length parameter is set correctly.	Measurement flag sensor S02.
Pusher Stall	In manual operation, the pusher has stalled. • Press E-stop and clear the jam. Release E-stop and press green button.	
Lathe Alarm	The lathe is in alarm. • Attempt to clear the lathe's alarm condition.	
No Bar Detected	No bar was detected by the grippers, or by the measurement flag. • If a bar is present, but not being detected, remove air pressure, and then check functionality of gripper sensor or measurement flag sensor.	Measurement flag sensor S02 Gripper sensor S07
Pusher Could Not Find Home Switch	During the Home reference, the pusher moved home and hit the hard stop, but the home sensor did not detect it. • Check functionality of home sensor. • If the pusher is stuck, remove air pressure. Then investigate the jam and increase homing torque if needed.	Home sensor S01
Home Could Not Be Reached	The pusher tried to move home, but the home sensor did not detect it. • Check functionality of home sensor. • Remove air pressure, then check for a jam. Possibly increase the return torque (see Factory Menu, Section 8.2).	Home sensor S01

Alarm Name	Possible Cause	Sensor
Servo Alarm…	This alarm indicates the Servo drive is in alarm. The alarm message will also display the script item that was executed when this alarm occurred. For example, “Servo alarm move facing” indicates an alarm occurred during the move to facing position. This is useful for troubleshooting. • On the alarm screen, select the alarm and then press the alarm info button for more information about the specific reason a given Servo alarm occurred.	
HMI Script Not Running	The HMI script has crashed, please contact Edge Technologies	
No USB Drive Plugged In	The HMI requires a USB drive to function.	
Illegal Character in File Name	Revise the file name with acceptable characters.	
Lathe Alarm	The lathe is in alarm. • Attempt to clear the lathe’s alarm condition.	
Failed to Load Default Part	There is no default part saved on the USB drive. • To save a default part, press “save default part” in the Admin Menu (see Admin Menu, Section 8.3).	
Feed Length Is Zero	No value has been entered for the feed length parameter. • Enter a value for the feed length parameter.	
Remnant Did Not Drop	A bar is still being detected in the grippers after the remnant extraction. • Check for a tight pusher collet, material slipping in the grippers, or inadequate air pressure. • Ensure that Part Length (see Part Menu, Section 8.1) and Max End of Bar (see Factory Menu, Section 8.2) are set correctly. • Check functionality of gripper sensor.	Gripper sensor S07
No Material Detected by Grippers	Material should be detected by grippers but wasn’t. • Ensure a remnant is not left in the spindle or in the guide channel. • If the magazine is empty, put more bars in the magazine. • If there is material present which is not being detected, remove air from the machine and check the functionality of gripper switch. • When using a front eject collet, this alarm can be disabled during remnant extraction by setting the remnant check parameter to “Do Not Check For Remnant” (see Part Menu, Section 8.1).	Gripper sensor S07
Bar Too Short	The bar measured is shorter than the value entered in the minimum bar length parameter (see Part Menu, Section 8.1), or less than 3”. • Ensure the measurement flag sensor is working properly.	Measurement flag sensor S02
Set Position Error	PLC could not command a set position to the Servo drive. Please contact Edge Technologies.	
Script Search Failed	There’s a problem with the script. Please contact Edge Technologies.	
Change Torque Failed	PLC could not command a torque change to the Servo drive. Please contact Edge Technologies.	

Alarm Name	Possible Cause	Sensor
Change Torque Failed	PLC could not command a torque change to the Servo drive. Please contact Edge Technologies.	
Failed to Load Default Factory	Factory default does not exist on the USB drive. Please contact Edge Technologies.	
Air Pressure Too Low	The compressed air is too low on the air regulator. • Ensure adequate air pressure is applied to the machine. At least 80 PSI is required to run the bar feeder. • The dial on the side of the pressure sensor needs to be adjusted.	Air pressure sensor S09
Short Feed Safety	The pusher didn't reach the expected feedout distance.	
Long Feed Safety	The pusher exceeded the expected feedout distance.	
Failed Auto Check	Conditions to go into auto were not met. • Go to the manual screen and press the auto check button to see which conditions were not met.	
Hood Open Alarm	The hood has been opened during a movement that is not allowed with the hood open. • Close the hood or check the functionality of the hood safety switch.	Hood Safety Switch S08
Pecking Limit Exceeded	Pecking cycles have exceeded the value entered in max pecking cycles (see Factory Menu, Section 8.2). • Clear any obstruction in the spindle. Utilize slow rpm spindle rotation during bar change. • Verify collet fits in the spindle. • Verify pusher fits in the spindle.	
Machine Lockout in Less Than Five Days	Contact Edge Technologies.	
Extraction Failed	The pusher did not retract to the expected position during the remnant pull off. • Remove air pressure before investigating. • Ensure that the pusher collet is not too tight, and that no burrs are present on bar stock. • Check air cylinder functionality. • Check extraction sensor functionality.	Extraction sensor S06
Insertion Failed	Pusher did not reach expected position during insertion. • Check prefeed position (see Factory Menu, Section 8.2). • Ensure that the pusher collet is not too tight, and that no burrs are present on bar stock. • Remove air pressure and verify air cylinder functionality.	
Extraction Cylinder Forward	The bar feeder attempted to open the channel with the extraction cylinder forward. • Clear the alarm by pushing the introduction / extraction button on the pendant, then press open channel button.	
Waited Too Long for Hood to Close Bar Change	After a bar change signal is sent, if the hood is open, the bar feeder will wait two minutes before alarming out. • Close the hood. Do a bar off, bar on, and then start back in auto.	

Alarm Name	Possible Cause	Sensor
Lathe Not in Auto with Collet Open	When the lathe is taken out of auto and the collet is opened, the bar feeder will alarm out to prevent feeding. • If the lathe was in auto, verify the lathe auto signal.	
Position Lost, Home Bar Feeder	If the pusher is moved while the bar feeder is powered off, the position will be lost. This requires a Home reference. • Press the Home reference button on the manual screen.	
Servo re-enable failed	Communication between the PLC and servo motor lost. • Power cycle bar feeder. If the alarm remains, call Edge Technologies.	
Default Part File Does Not Exist	There is no default part saved on the USB drive. • To save a default part, press “save default part” in the Admin menu (see Admin Menu, Section 8.3).	
Default Factory File Does Not Exist	Factory default does not exist on the USB drive, please contact Edge Technologies.	
Failed Auto Check	Conditions to go into auto were not met. • Go to the manual screen and press the auto check button to see which conditions were not met.	
Already at Zero When Homing	The Home reference was executed while the pusher was already home. • Jog pusher forward, then hit the Home reference button.	
Lathe Alarm	The lathe is in alarm. • If the lathe is not in alarm, check the interface wiring.	
Pushback Limit Exceeded	The value in either pushback collet open or pushback collet closed has been exceeded. • Ensure proper lathe collet tension. • Check for burrs on the bar stock.	
Pusher Not at Zero When Grippers Activated	The gripper button the on pendant was pressed while the pusher was not at zero. • Jog the pusher home, then press the gripper button on the pendant.	
Measurement Flag Triggered Before Expected	The measurement flag tripped before an attempt was made to measure a bar. • Verify measurement flag sensor functionality. • Verify functionality of air cylinder for measurement flag.	
Test Alarm	The test alarm button was pressed in the admin menu (see Admin Menu, Section 8.3).	
Negative Parts Remaining	The calculated parts remaining are a negative number. This indicates improperly set parameters. Please contact Edge Technologies.	
Bar Length Longer Than Facing Length	This indicates improperly set parameters. Please contact Edge Technologies.	
Lathe Door Open	• If the lathe door is closed, check wiring. • Service parameters (see Admin Menu, Section 8.3) can disable lathe door safety if the signal is not provided by the lathe	

Alarm Name	Possible Cause	Sensor
Chuck Closed Before Feedout Finished	The chuck closed before the pusher could reach the expected position for a feedout. • Increase the dwell time in the lathe program. • Ensure the feed confirm signal is not backwards.	
Chuck Close During Bar On	Open the chuck, then press bar on.	
Attempted Production Restart with Preload Bar	This is specifically related to Ethernet connectivity. Please refer to the Fanuc FOCAS manual.	
Commit Did Not Shut Off	This is specifically related to Ethernet connectivity. Please refer to the Fanuc FOCAS manual.	
Lathe Command Part Number is Zero	Factory default does not exist on the USB drive, please contact Edge Technologies.	
No Part Found with Commanded Number	This is specifically related to Ethernet connectivity. Please refer to the Fanuc FOCAS manual.	
No Machine Type Backup Exists	Please contact Edge Technologies.	
No Machine Type in PLC	Please contact Edge Technologies.	
PLC IO Module Error	The PLC lost communication to the required IO module. Please contact Edge Technologies.	
Pusher Forced Movement	In manual mode, if the pusher unexpectedly moves, the Servo will turn off. • If you need to manually move the pusher by hand or with the crank handle, first press the pusher disable button in the admin menu (see Admin Menu, Section 8.3).	
Absolute Move Position Not Reached	The Servo drive was commanded to an absolute position, but it did not reach that position. • Check the torque settings. • Make sure no speeds are set to zero.	
CRC Check Failure	The file on the USB drive is corrupted. Please contact Edge Technologies.	
PLC Not in Run Mode	Check the toggle switch for run mode on the front of PLC, under the SD card flap.	
Channel Close Timeout	The channel didn't close after an attempt was made to close it. • Remove air pressure before clearing jams.	
Channel Open Timeout	The channel didn't open after an attempt was made to open it. • Remove air pressure before clearing any jams.	
Failed to Load Default IO Config	Please contact Edge Technologies.	
Change Acceleration Error	Please contact Edge Technologies.	

11. Interface Signal Definitions

Common (from lathe) – This is the 24v DC supply voltage from the lathe for signal sent to the bar feeder control. The voltage cannot be mixed with the bar feeder power supply.

Cycle start (bar change end, program start) – Typically, this is a normally open circuit controlled by the bar feeder Cycle Start/MCode Finish relay. Voltage is supplied by the lathe. This circuit lets the lathe know the bar change is completed and that the lathe should resume the program.

Automatic mode (Automatic mode on, bar feeder ready for work, spindle interlock) – Typically, this is a normally open circuit controlled by the bar feeder. Voltage is supplied by the lathe. This supplies the lathe with the bar feed automatic signal. If the bar feeder safety circuit is open, the bar feeder will not go into Automatic mode.

End of bar (bar end, block delete, program stop) – Typically, this is a normally open circuit controlled by the bar feeder end-of-bar relay. Voltage is supplied by the lathe. This circuit is closed once the bar feeder has determined the current bar is too short to produce any more parts.

Bar feeder on – Typically, this is a normally open circuit controlled by the bar feeder alarm relay. Voltage is supplied by the lathe.

Lathe Emergency Stop (MC ready) – Voltage is supplied by the bar feeder, and control is performed by the lathe. When this circuit is opened, it will stop bar feeder operation.

Common (from bar feeder) – This is the 24v DC supply voltage from the bar feeder used for signals sent to the lathe control. The voltage cannot be mixed with the lathe power supply.

Lathe manual/auto – Typically, this is a normally open circuit controlled by the lathe. Voltage is supplied by the bar feed. This circuit can be bypassed if necessary.

Bar change (end of cycle) – Typically, this is a normally open circuit controlled by the lathe. Voltage is supplied by the bar feed. This circuit is closed once the lathe has received the end-of-bar signal from the bar feed and the lathe is machining the last part from the current bar.

Chuck/collet open – Typically, this is a normally open circuit controlled by the lathe. Voltage is supplied by the bar feed common.

Feed/torque stop - Typically, this is a normally open circuit controlled by the lathe. Voltage is supplied by the bar feed common.

Door safety – Typically, this is a normally open circuit controlled by the lathe. Voltage is supplied by the bar feed common. The signal prevents the bar pusher from feeding in Automatic mode if the door is open.

Bar feeder Emergency Stop – Voltage is supplied by the bar feeder, and the control is performed by the lathe relay. When this circuit is opened, this will stop bar feeder and lathe operation.

Power supply – The power supply serves as the supply voltage to the bar feeder from the lathe, usually 3 phase 200v-220v, nominal voltage 208v. In some applications, the supply voltage at the customer may be 440v. In this application, a transformer will be required before electrical connection can be made. Catastrophic electrical damage can occur to the bar feeder if a transformer is required but not present.

Common (from lathe) - Voltage is sent from the lathe to power relays in the bar feeder.

Cycle Start - Cycle start is used to answer a latched MCode from the lathe. Typically, this signal is for acknowledging that material has been loaded during a bar change or pushed to position during feeding cycles. This MCode is usually for the bar change cycle or sometimes can be used to answer the feed stop (torque stop).

Automatic mode (Automatic mode on, bar feeder ready for work, spindle interlock) - When wired, this signal ensures that the lathe does not run without the bar feeder in Automatic mode. The lathe will react in other ways when the automatic signal from the bar feeder is not being sent. Some lathes generate an alarm when the lathe is put into “memory mode,” or a spindle interlock alarm may show up when attempting to rotate the spindle, or a “bar feeder torque off” alarm may show.

End of bar (bar end, block delete, program stop) – The end-of-bar signal is sent from the bar feeder to the lathe. The lathe needs to know that the bar feeder has reached the specified limit position of the pusher. This position is set in the bar feeder factory settings. The signal can be sent multiple ways at different durations.

Bar feeder on - This signal is typically used as a bar feeder alarm to the lathe. If the lathe always receives a signal that the bar feeder is in alarm, it will show a message saying that the bar feeder is in alarm. If set correctly, the alarm state of the bar feeder and the lathe should correspond to each other.

Lathe emergency stop (MC ready) - This signal is incredibly important. The signal sends the bar feeder voltage out to a relay in the lathe. The voltage should be returned to the bar feeder unless the lathe is in Emergency Stop.

Bar feeder common - The bar feeder common will be sent to a relay in the lathe. When the lathe relay is fired it will allow the corresponding signal to be seen by the bar feeder. If no signals are coming through from the lathe to the bar feeder, it could be that the common is not being sent back. This could be because of a wiring issue. It could also be that the bar feeder interface is not turned on in the lathe.

Lathe manual/auto – Edge Technologies products typically use this to limit feeding. If the bar feeder does not see the lathe automatic signal, it will not feed material when the collet opens.

Bar change (end of cycle) - This signal typically corresponds with an MCode from the lathe. Usually, the MCode will be used to send a bar change signal to the bar feeder. When this signal is sent, if properly set up, the lathe should latch to this MCode until it receives “cycle start” from the bar feeder.

Chuck/collet open - The chuck open signal lets the bar feeder know that the main spindle clamp is open or closed. When the bar feeder is in Automatic mode and it receives the collet open signal, it will feed at a fixed speed and torque (that is, if all restrictions are satisfied, including torque stop, lathe automatic, and door safety).

Feed stop - This signal is used to stop the bar feeder from pushing when the bar feeder is in Automatic mode and the collet is open. It can also be used in the opposite way: that it does not push at all until the bar feeder is in Automatic mode, the collet is open, and the feed stop is given. In this instance, it would be used as an MCode feed. Feed stop is generally used in the bar change process so that the bar feeder does not push before it pulls remnant out of the collet.

Door safety - This signal is from the lathe door safety. If the lathe door is open, then the bar feeder should not be able to feed forward. This can also be used like a feed stop depending on the lathe and bar feeder.

Bar feeder Emergency Stop - Signal will be sent to the lathe to generate Emergency Stop on the lathe.

Power supply – Always check voltage at the lathe plug before the bar feeder is plugged in. The bar feeder plug wiring should also be checked to the wiring print supplied with the bar feeder. Check the wiring of the bar feeder plug, check that the lathe voltage is on the same pins as the plug, and check that the voltage of the lathe is proper and does not fluctuate beyond safe operating voltage.

12. Workholding or Service

Edge Technologies is proud to have partnered with Schlenker Spannwerkzeuge for nearly 15 years, supplying workholding needs for bar feeders and lathes.

View the Edge catalogue at https://edgetechnologies.com/schlenker-collets/. Contact the Edge Technologies Parts Department by calling (314) 810-3959 or emailing orderdesk@edgetechnologies.com.

Direct service questions to (314) 810-3927 or edgehelp@edgetechnologies.com.

Edge Technologies' hours of operation are Monday-Thursday, 7:30 a.m. to 5 p.m. CST, and Friday, 7:30 a.m. to 4 p.m. CST. Contact the main phone at (314) 692-8388.

For helpful tutorials, visit our Edge-U-Cation resource library at https://edgetechnologies.com/videos/.

13. Index

A

Alarm 63
Automatic mode 26, 49, 51, 68, 69
Axial shift 22, 23

B

Bar
  Bar change 23, 68, 69
  Bar straightness 40
Bushing blocks 21, 40

C

Collet 21, 22, 23, 27, 32, 40, 49, 50, 52, 53, 54, 55, 56, 57, 58, 68, 69
Compressed air supply 12

E

Electrical cabinet 49
Emergency Stop 13, 23, 27, 30, 49, 68, 69

F

Fixed headstock 24, 55

G

Gripper 50, 53
Guide channel 20, 28, 30, 39, 40, 50

H

Handheld pendant 13, 32, 48, 49, 55
Hard nose 21, 24
Hardware 7, 20
HMI 13, 46, 49
Home reference 49, 50, 55, 56

L

Lathe 13, 15, 18, 21, 22, 24, 31, 53, 54, 56, 58, 68, 69, 70

M

Maintenance 14, 18, 63

N

Noses
  Hard nose 21, 22, 24
  Telescopic nose 21, 22, 24

O

Oil 10, 12, 24, 54
  Oil pump 39, 54
  Oil tank 40
  Oil tray drip pan 24

P

Parameters 51, 53, 54, 55, 56, 58, 62
  Part Menu 54
Part length 51, 52
Parts programming 59, 60, 61
PLC 26
Pre-feed pusher 29, 50
Pusher 29, 54, 56

R

Remnant 19, 53
Rotating tip 28

S

Safety 6, 7, 13, 14, 20, 51, 68, 69
Serial Plate 8
Servo
  Servo alarm 13, 26, 49, 51, 52, 53, 55, 58, 68, 69
Software 7
Spindle liner 20, 21, 24, 27
Swiss-type 24, 52, 55
Swiss-type applications 52, 55
Synchronization 22, 24, 53
  Synchronization rod 24

T

TIR 40
Transportation 16, 17

V

Vibration Device
  AVD 32, 53, 57
  MAVD 21, 22, 24, 31, 32, 53, 57

W

Workholding 18, 70

A4

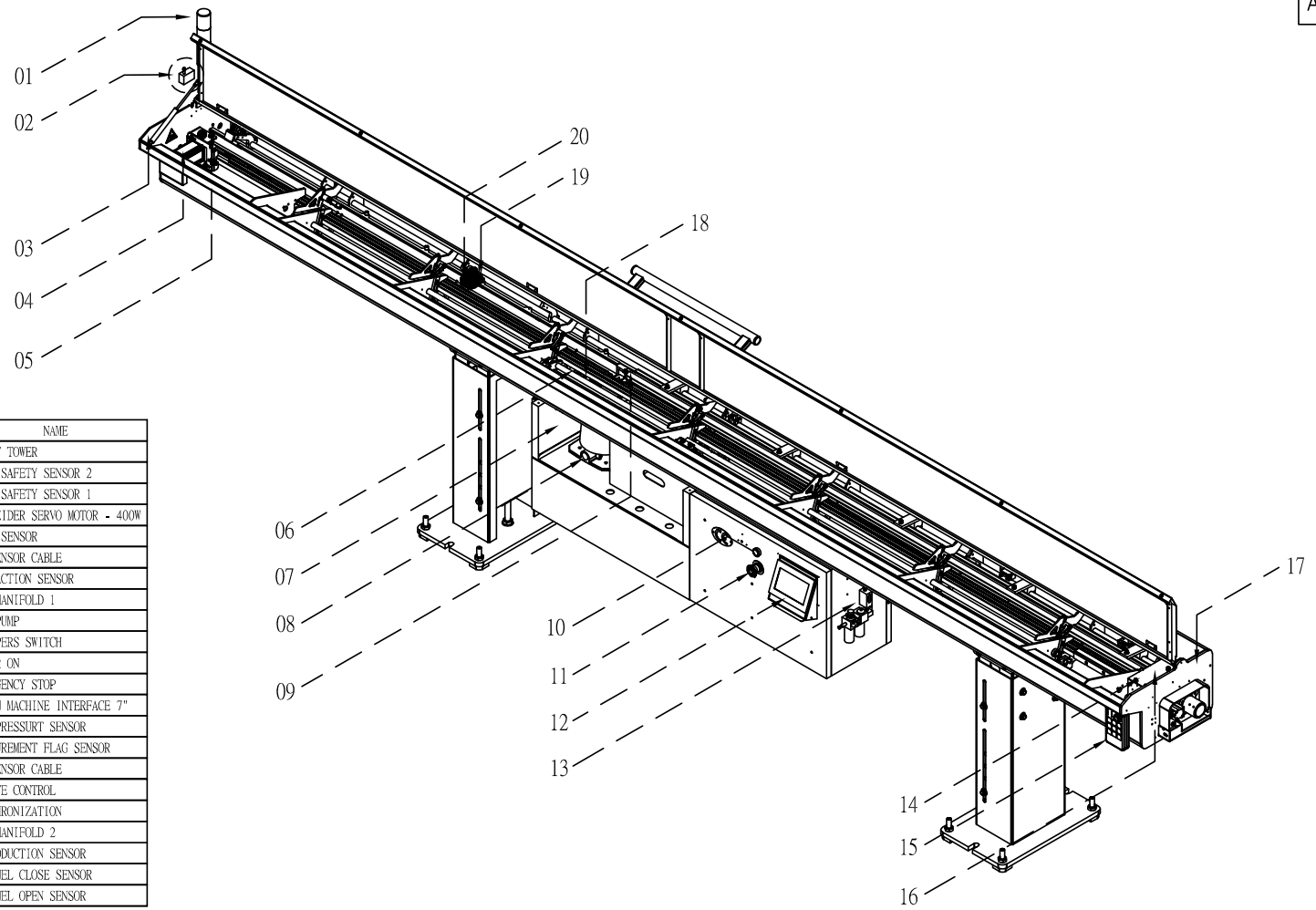

NO.	PART NO.	CODE	NAME
1.	J630113	HL1	LIGHT TOWER
2.	J310409	S08b	HOOD SAFETY SENSOR 2
3.	J311802	S08	HOOD SAFETY SENSOR 1
4.	J212052	MT1	SCHNEIDER SERVO MOTOR - 400W
5.	J312500	S01	HOME SENSOR
	J312541		5M SENSOR CABLE
6.	A12140503	S06	EXTRACTION SENSOR
7.	RAY-A-M	SV1	AIR MANIFOLD 1
8.	RA260L0401	OP	OIL PUMP
9.	J310403	S07	GRIPPERS SWITCH
10.	J310705	SS1	POWER ON
11.	J3107041	ES1	EMERGENCY STOP
12.	J210519	HM1	HUMAN MACHINE INTERFACE 7"
13.	A12140400	S09	AIR PRESSURT SENSOR
14.	J312500	S02	MEASUREMENT FLAG SENSOR
	J312541		5M SENSOR CABLE
15.	JVCQ1B202	HP	REMOTE CONTROL
16.	RA26DR001B	CL	SYNCHRONIZATION
17.	RAY-A-M	SV2	AIR MANIFOLD 2
18.	A12140503	S05	INTRODUCTION SENSOR
19.	J310407	S04	CHANNEL CLOSE SENSOR
20.	J310407	S03	CHANNEL OPEN SENSOR

BAR FEEDER TYPE: Scout	EDGE TECHNOLOGIES	FIRST DATE: 2022/11/08	REVISION DATE: 2024/04/12	MAIN VOLTAGE: 220V AC 3-PHASE	SIGNAL VOLTAGE: 24V DC	PAGE: P. 01
LATHE NAME: ----		DRAWN BY: LIN	CHECKED BY:	DESCRIPTION: Machine electricity position		
LATHE TYPE: ----				DRAWING NO.: JV-EDGE RAY II-EG		VERSION: B0

A4

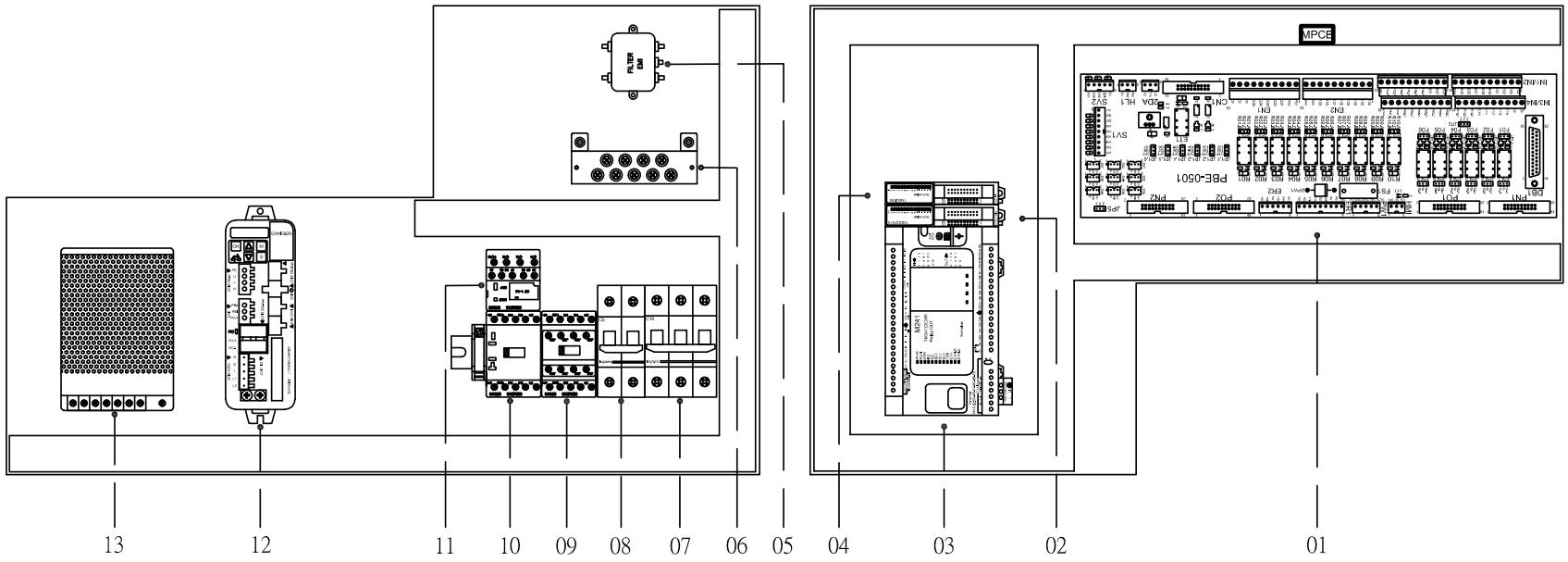

NO.	PART NO.	CODE	CODE	NO.	PART NO.	CODE	CODE
1.	J515004	MPCB	MAIN PC RELAY BOARD	11.	J313350	OL	OVER RELAY
2.	J212009	POA	OUTPUT MODULE	12.	J212051	SVO	SERVO MOTOR DRIVER - 0.4KW
3.	J212006	PLC	PROGRAMMABLE LOGIC CONTROLLER	13.	J230107	PS1	POWER SUPPLY
4.	J221008	PIA	INPUT MODULE				
5.	J220405	FIL	FILTER				
6.	J631202	GND	FACILITIES GROUND				
7.	J310524	NFB	NO FUSE BREAKER				
8.	J310526	CP1	CIRCUIT PROTECTION				
9.	J312709 + J312710	MC1+ACT1	MAGNETIC CONTACTOR				
10.	J312709	MC3	MAGNETIC CONTACTOR				

BAR FEEDER TYPE: Scout	EDGE TECHNOLOGIES	FIRST DATE: 2022/11/08	REVISION DATE: 2024/04/12	MAIN VOLTAGE: 220V AC 3-PHASE	SIGNAL VOLTAGE: 24V DC	PAGE: P. 02
LATHE NAME: ----		DRAWN BY: LIN	CHECKED BY:	DESCRIPTION: Distribution of Electric parts		
LATHE TYPE: ----				DRAWING NO.: JV-EDGE RAY II-EG		VERSION: B0

A4

SOLENOID VALVE DIAGRAM 1

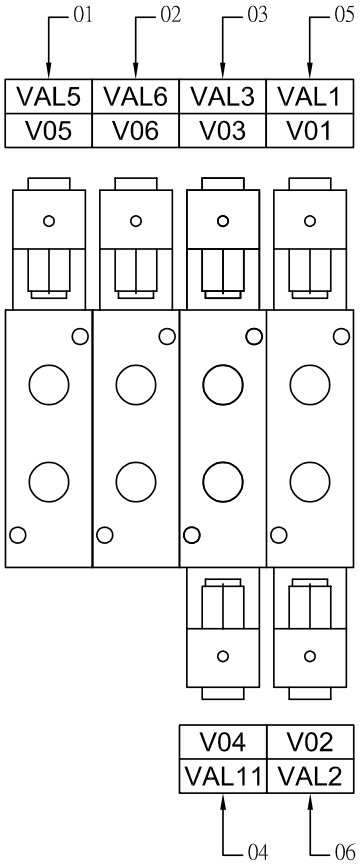

SOLENOID VALVE DIAGRAM 2

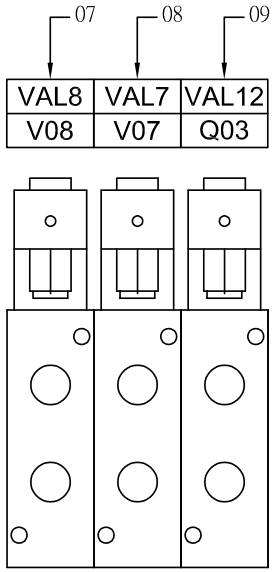

NO.	PART NO.	CODE	NAME
01	RAY-A-M	VAL5	SEPARATORS (V05)
02	RAY-A-M	VAL6	GRIPPERS (V06)
03	RAY-A-M	VAL3	INTRODUCTION (V03)
04		VAL4	EXTRACTION (V04)
05	RAY-A-M	VAL1	CHANNEL OPEN (V01)
06		VAL2	CHANNEL CLOSE (V02)
07	RAY-A-M	VAL8	MOVABLE ANTI-VIBRATION (V08)
08	RAY-A-M	VAL7	1st ANTI-VIBRATION (V07)
09	RAY-A-M	VAL12	2nd ANTI-VIBRATION (Q03)

BAR FEEDER TYPE: Scout	FIRST DATE: 2022/11/08	REVISION DATE: 2024/04/12	MAIN VOLTAGE: 220V AC 3-PHASE	SIGNAL VOLTAGE: 24V DC	PAGE: P. 05
LATHE NAME: ----	DRAWN BY: LIN	CHECKED BY:	DESCRIPTION: Solenoid valves position		
LATHE TYPE: ----			DRAWING NO.: JV-EDGE RAY II-EG		VERSION: B0

EDGE TECHNOLOGIES

A4

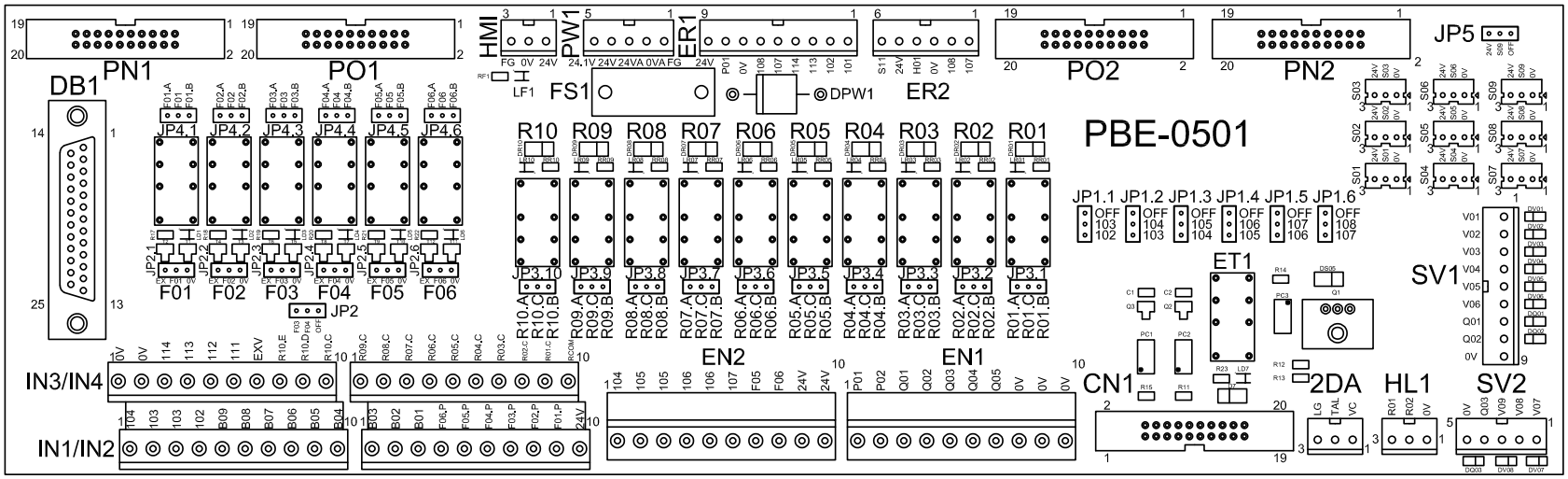

NO.	PART NO.	CODE	NAME
01	J515005	R1~R10 / F01~F06	RELAY
02	J620106	FS1	FUSE
03	J515004	MPCB	Main PC board Distribution box(PBE 0501)

BAR FEEDER TYPE	FIRST DATE	REVISION DATE	MAIN VOLTAGE	SIGNAL VOLTAGE	PAGE
Scout	2022/11/08	2024/04/12	220V AC 3-PHASE	24V DC	P. 06
LATHE NAME: ----	DRAWN BY: LIN	CHECKED BY	DESCRIPTION: Main PC board		
LATHE TYPE: ----			DRAWING NO.: JV-EDGE RAY II-EG	VERSION: B0	

EDGE TECHNOLOGIES

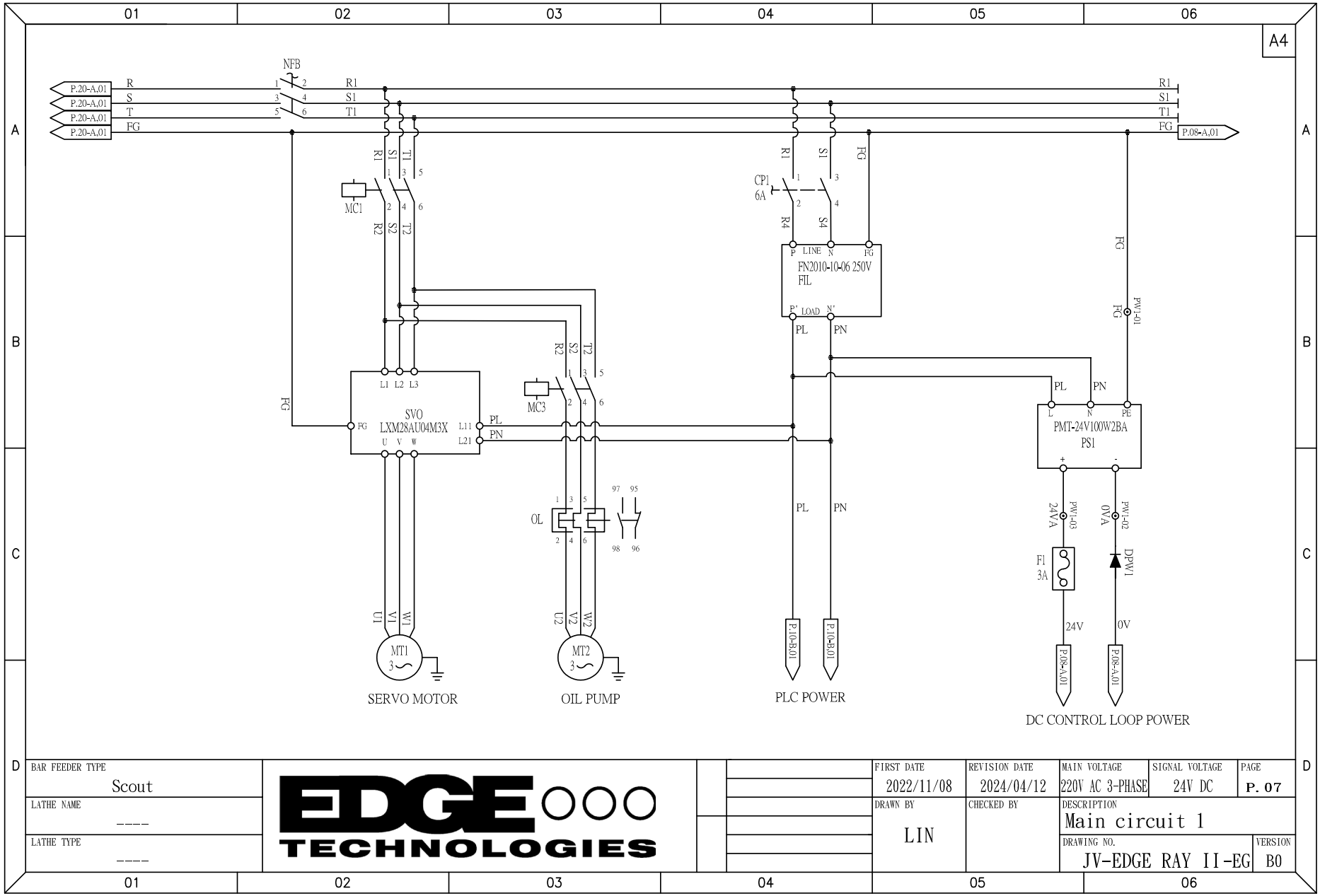

BAR FEEDER TYPE		FIRST DATE	REVISION DATE	MAIN VOLTAGE	SIGNAL VOLTAGE	PAGE
Scout	EDGE TECHNOLOGIES	2022/11/08	2024/04/12	220V AC 3-PHASE	24V DC	P. 07
LATHE NAME ----		DRAWN BY LIN	CHECKED BY	DESCRIPTION Main circuit 1		
LATHE TYPE ----				DRAWING NO. JV-EDGE RAY II-EG		VERSION B0

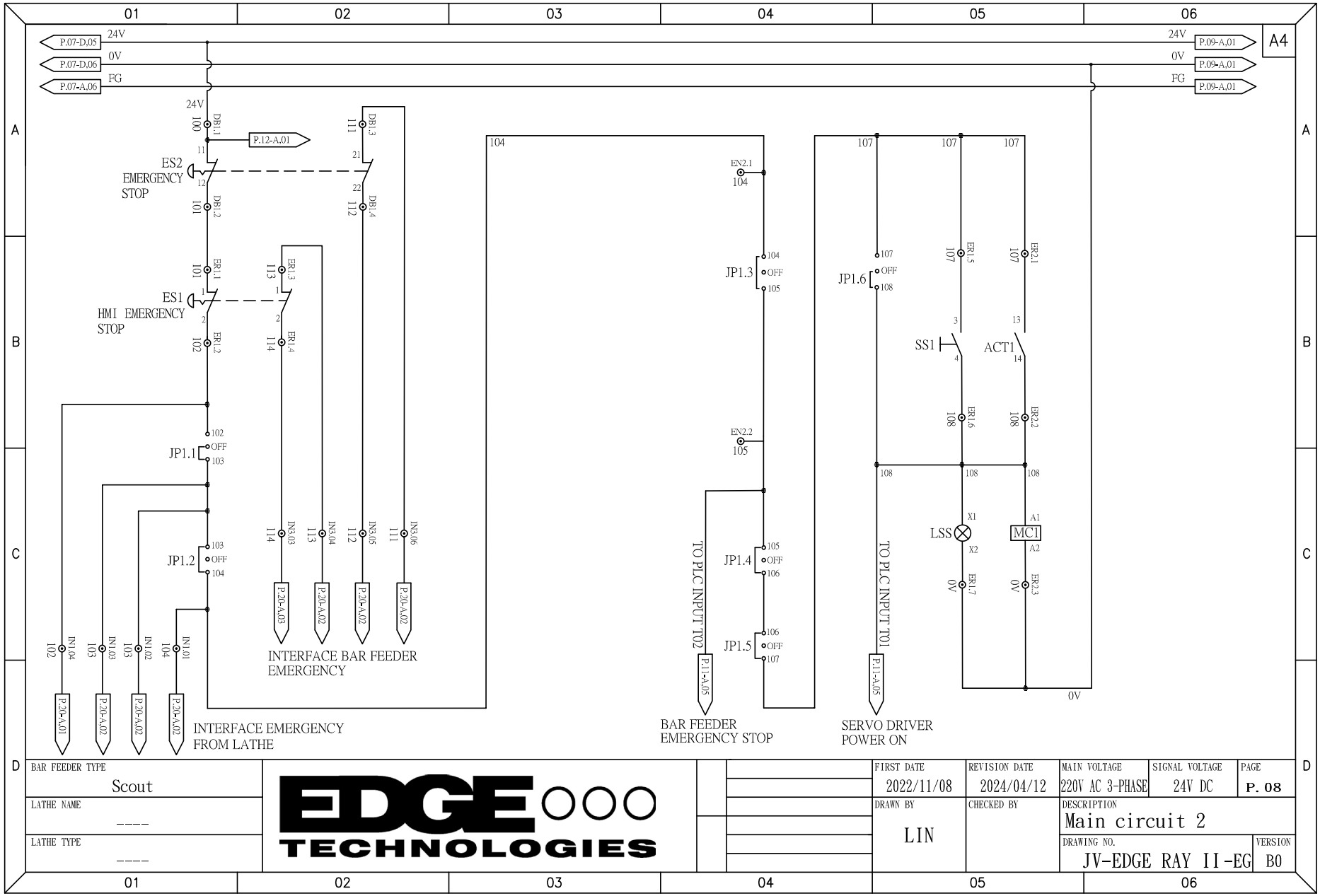

BAR FEEDER TYPE: Scout	EDGE TECHNOLOGIES	FIRST DATE: 2022/11/08	REVISION DATE: 2024/04/12	MAIN VOLTAGE: 220V AC 3-PHASE	SIGNAL VOLTAGE: 24V DC	PAGE: P. 08
LATHE NAME: ----		DRAWN BY: LIN	CHECKED BY:	DESCRIPTION: Main circuit 2		
LATHE TYPE: ----				DRAWING NO.: JV-EDGE RAY II-EG		VERSION: B0

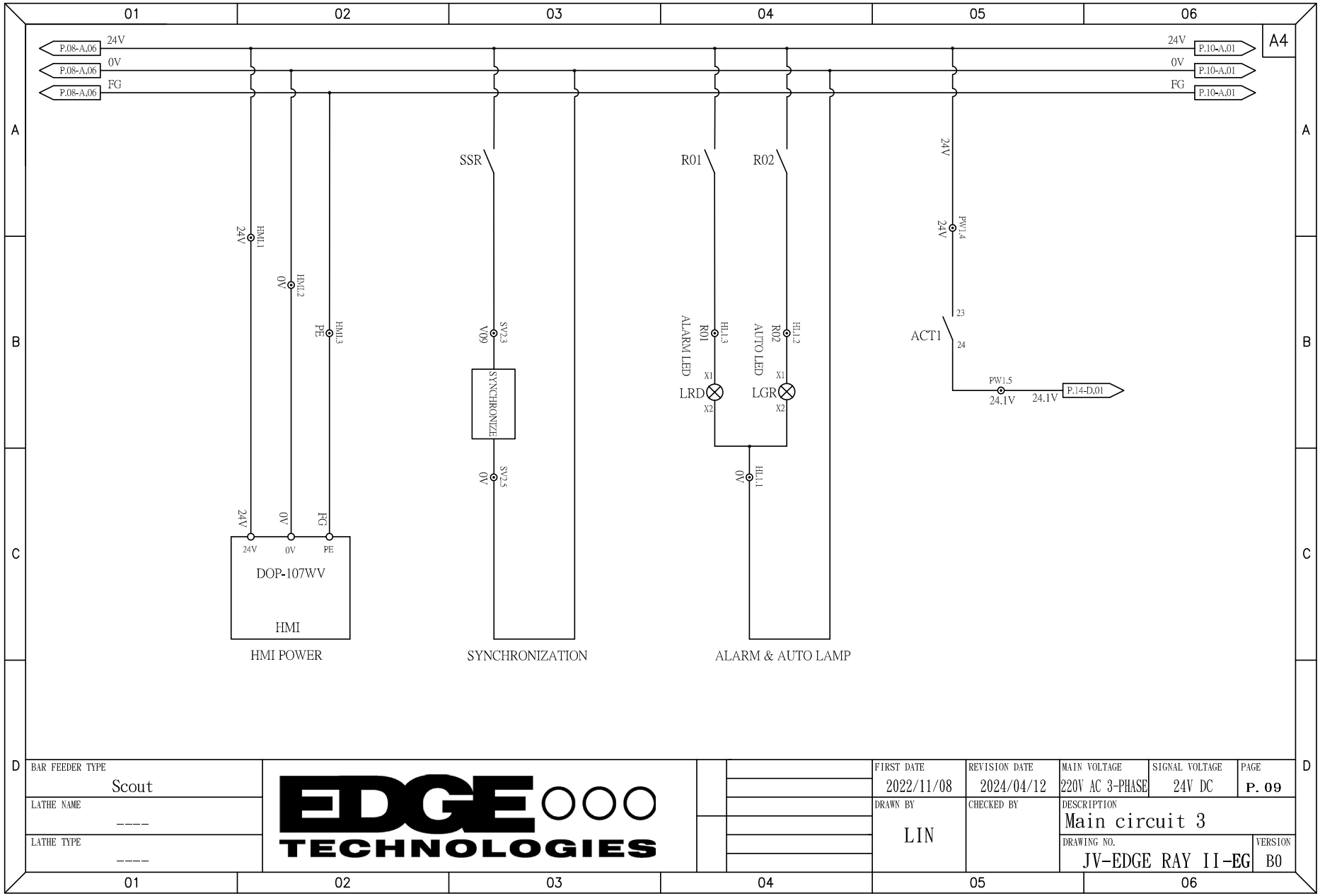

BAR FEEDER TYPE: Scout	EDGE TECHNOLOGIES	FIRST DATE: 2022/11/08	REVISION DATE: 2024/04/12	MAIN VOLTAGE: 220V AC 3-PHASE	SIGNAL VOLTAGE: 24V DC	PAGE: P. 09
LATHE NAME: ----		DRAWN BY: LIN	CHECKED BY:	DESCRIPTION: Main circuit 3		
LATHE TYPE: ----				DRAWING NO.: JV-EDGE RAY II-EG		VERSION: B0

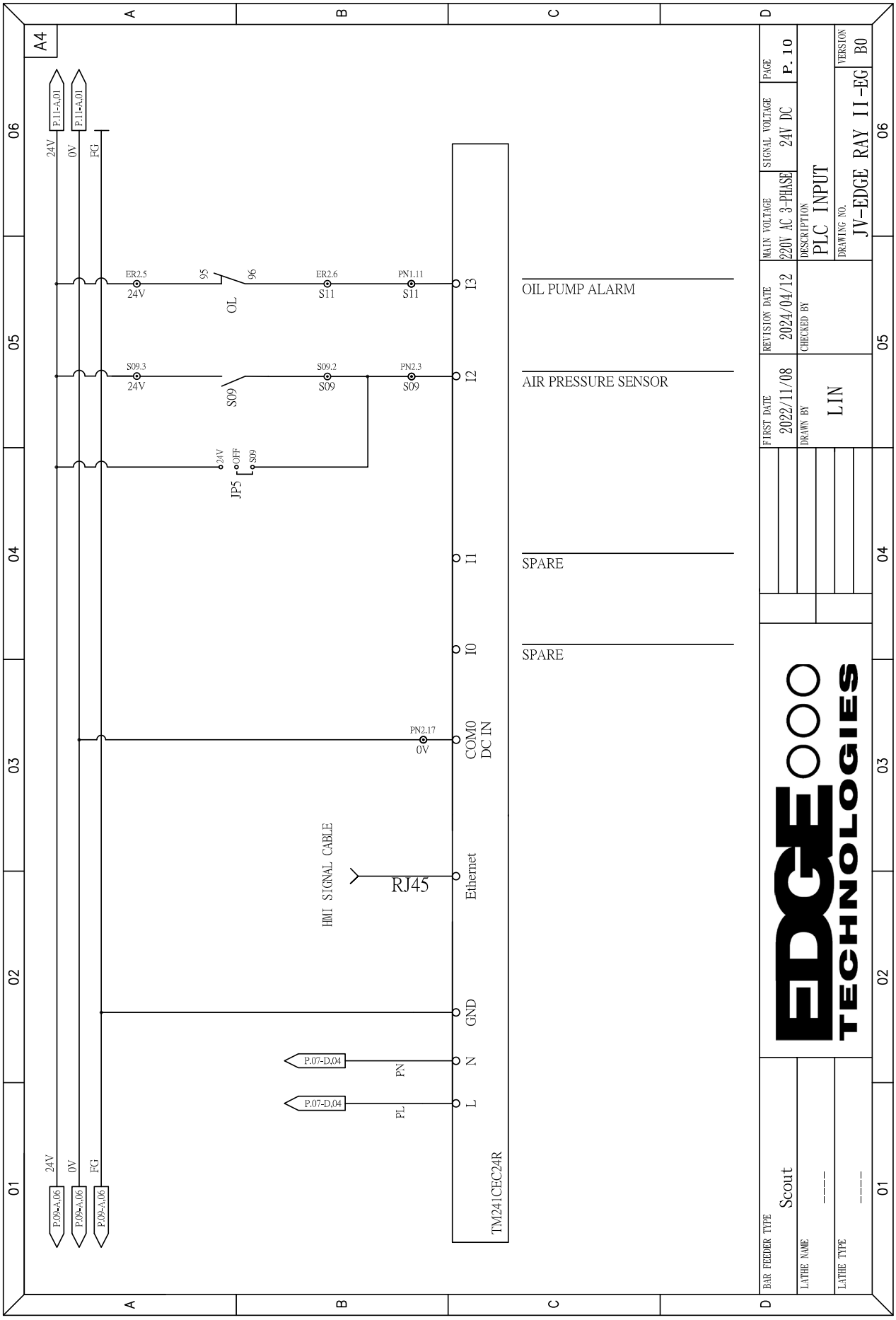
A4
P.11-A,01
24V
0V
FG
ER2.5
24V
95
96
OL
ER2.6
S11
PN1.11
S11
I3
OIL PUMP ALARM
S09.3
24V
S09
S09.2
S09
PN2.3
S09
I2
AIR PRESSURE SENSOR
24V
OFF
S09
JP5
I1
SPARE
I0
SPARE
PN2.17
0V
COM0
DC IN
HMI SIGNAL CABLE
RJ45
Ethernet
GND
P.07-D,04
PN
N
P.07-D,04
PL
L
TM241CEC24R
P.09-A,06
BAR FEEDER TYPE
Scout
LATHE NAME
LATHE TYPE
FIRST DATE
2022/11/08
REVISION DATE
2024/04/12
MAIN VOLTAGE
220V AC 3-PHASE
SIGNAL VOLTAGE
24V DC
PAGE
P.10
DRAWN BY
LIN
CHECKED BY
DESCRIPTION
PLC INPUT
DRAWING NO.
JV-EDGE RAY II-EG
VERSION
B0
EDGE TECHNOLOGIES

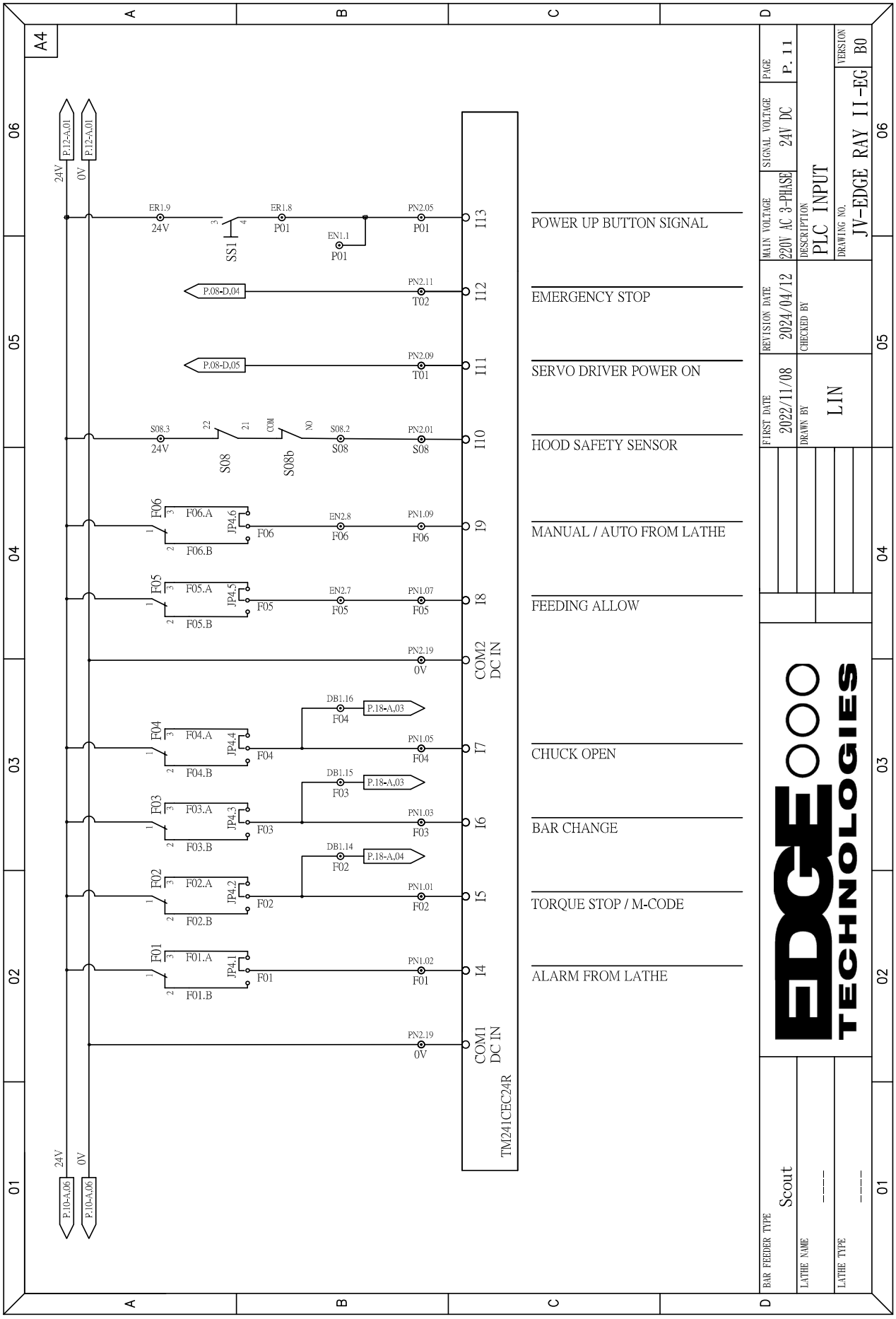
A4
24V
0V
P.12-A.01
P.10-A.06
ER1.9
24V
SS1
ER1.8
P01
EN1.1
P01
PN2.05
P01
I13
POWER UP BUTTON SIGNAL
P.08-D.04
PN2.11
T02
I12
EMERGENCY STOP
P.08-D.05
PN2.09
T01
I11
SERVO DRIVER POWER ON
S08.3
24V
22
21
COM
NO
S08
S08b
S08.2
S08
PN2.01
S08
I10
HOOD SAFETY SENSOR
F06
F06.A
F06.B
JP4.6
F06
EN2.8
F06
PN1.09
F06
I9
MANUAL / AUTO FROM LATHE
F05
F05.A
F05.B
JP4.5
F05
EN2.7
F05
PN1.07
F05
I8
FEEDING ALLOW
PN2.19
0V
COM2
DC IN
F04
F04.A
F04.B
JP4.4
F04
DB1.16
F04
P.18-A.03
PN1.05
F04
I7
CHUCK OPEN
F03
F03.A
F03.B
JP4.3
F03
DB1.15
F03
P.18-A.03
PN1.03
F03
I6
BAR CHANGE
F02
F02.A
F02.B
JP4.2
F02
DB1.14
F02
P.18-A.04
PN1.01
F02
I5
TORQUE STOP / M-CODE
F01
F01.A
F01.B
JP4.1
F01
PN1.02
F01
I4
ALARM FROM LATHE
PN2.19
0V
COM1
DC IN
TM241CEC24R
A
B
C
D
01
02
03
04
05
06
BAR FEEDER TYPE
Scout
LATHE NAME

LATHE TYPE

FIRST DATE
2022/11/08
DRAWN BY
LIN
REVISION DATE
2024/04/12
CHECKED BY
MAIN VOLTAGE
220V AC 3-PHASE
SIGNAL VOLTAGE
24V DC
PAGE
P. 11
DESCRIPTION
PLC INPUT
DRAWING NO.
JV-EDGE RAY II-EG
VERSION
B0
EDGE
TECHNOLOGIES

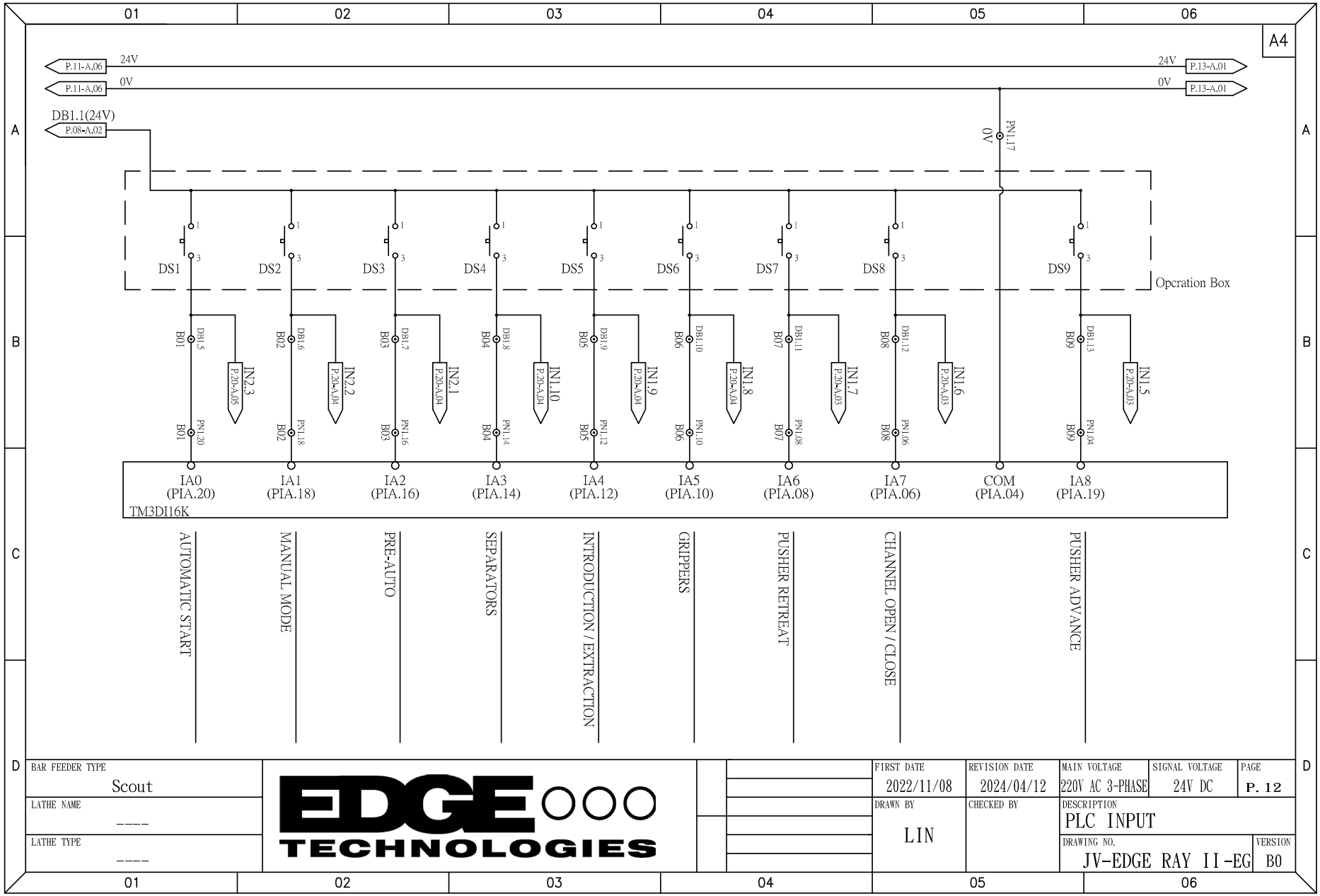
A4
P.11-A.06
24V
0V
P.13-A.01
DB1.1(24V)
P.08-A.02
PN1.17
DS1
DS2
DS3
DS4
DS5
DS6
DS7
DS8
DS9
Opcration Box
IN2.3
IN2.2
IN2.1
IN1.10
IN1.9
IN1.8
IN1.7
IN1.6
IN1.5
P.20-A.05
P.20-A.04
P.20-A.03
IA0 (PIA.20)
IA1 (PIA.18)
IA2 (PIA.16)
IA3 (PIA.14)
IA4 (PIA.12)
IA5 (PIA.10)
IA6 (PIA.08)
IA7 (PIA.06)
COM (PIA.04)
IA8 (PIA.19)
TM3DI16K
AUTOMATIC START
MANUAL MODE
PRE-AUTO
SEPARATORS
INTRODUCTION / EXTRACTION
GRIPPERS
PUSHER RETREAT
CHANNEL OPEN / CLOSE
PUSHER ADVANCE
BAR FEEDER TYPE
Scout
LATHE NAME

LATHE TYPE

EDGE TECHNOLOGIES
FIRST DATE
2022/11/08
REVISION DATE
2024/04/12
MAIN VOLTAGE
220V AC 3-PHASE
SIGNAL VOLTAGE
24V DC
PAGE
P. 12
DRAWN BY
LIN
CHECKED BY
DESCRIPTION
PLC INPUT
DRAWING NO.
JV-EDGE RAY II-EG
VERSION
B0

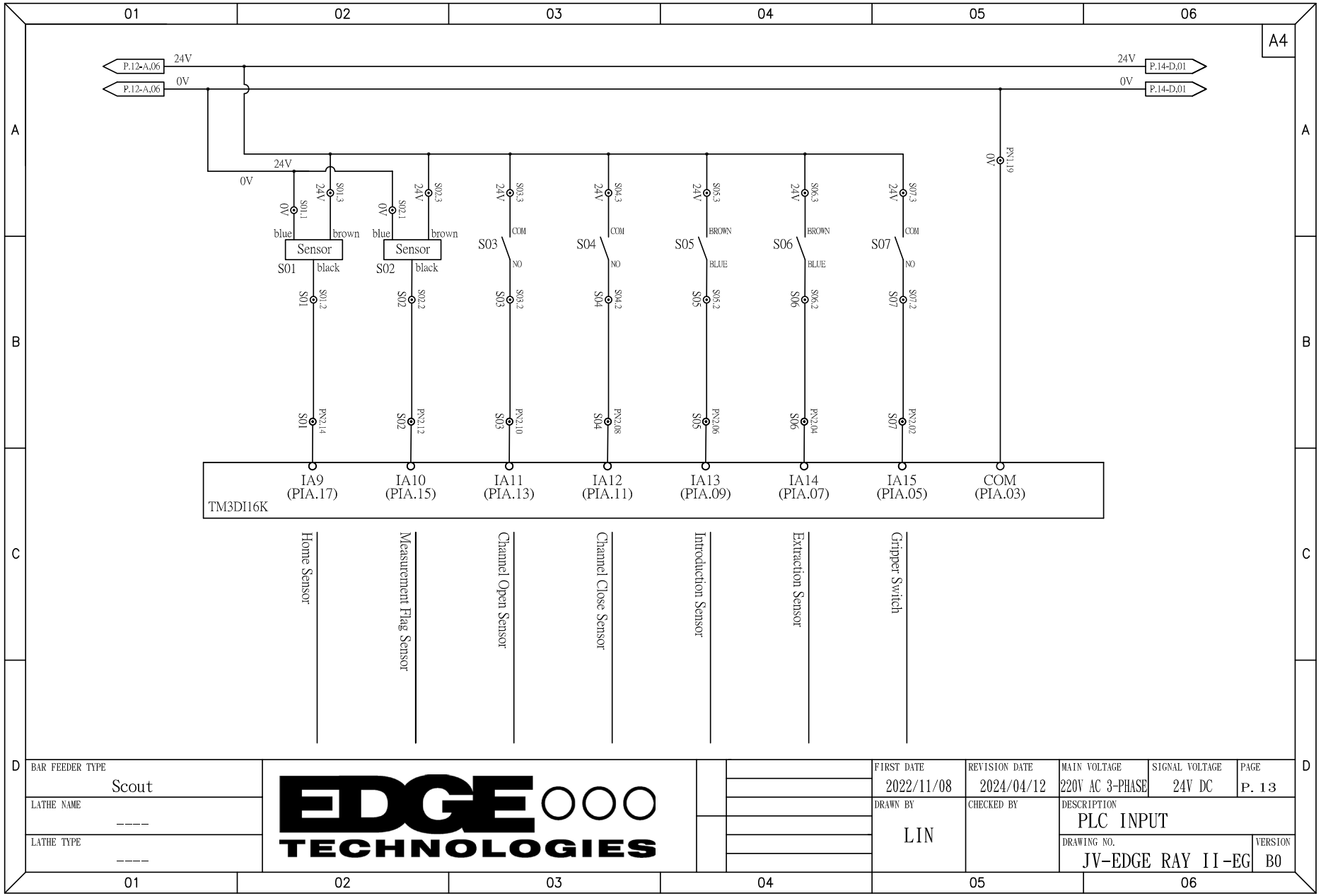

BAR FEEDER TYPE: Scout	EDGE TECHNOLOGIES	FIRST DATE: 2022/11/08	REVISION DATE: 2024/04/12	MAIN VOLTAGE: 220V AC 3-PHASE	SIGNAL VOLTAGE: 24V DC	PAGE: P. 13
LATHE NAME: ----		DRAWN BY: LIN	CHECKED BY	DESCRIPTION: PLC INPUT		
LATHE TYPE: ----				DRAWING NO.: JV-EDGE RAY II-EG		VERSION: B0

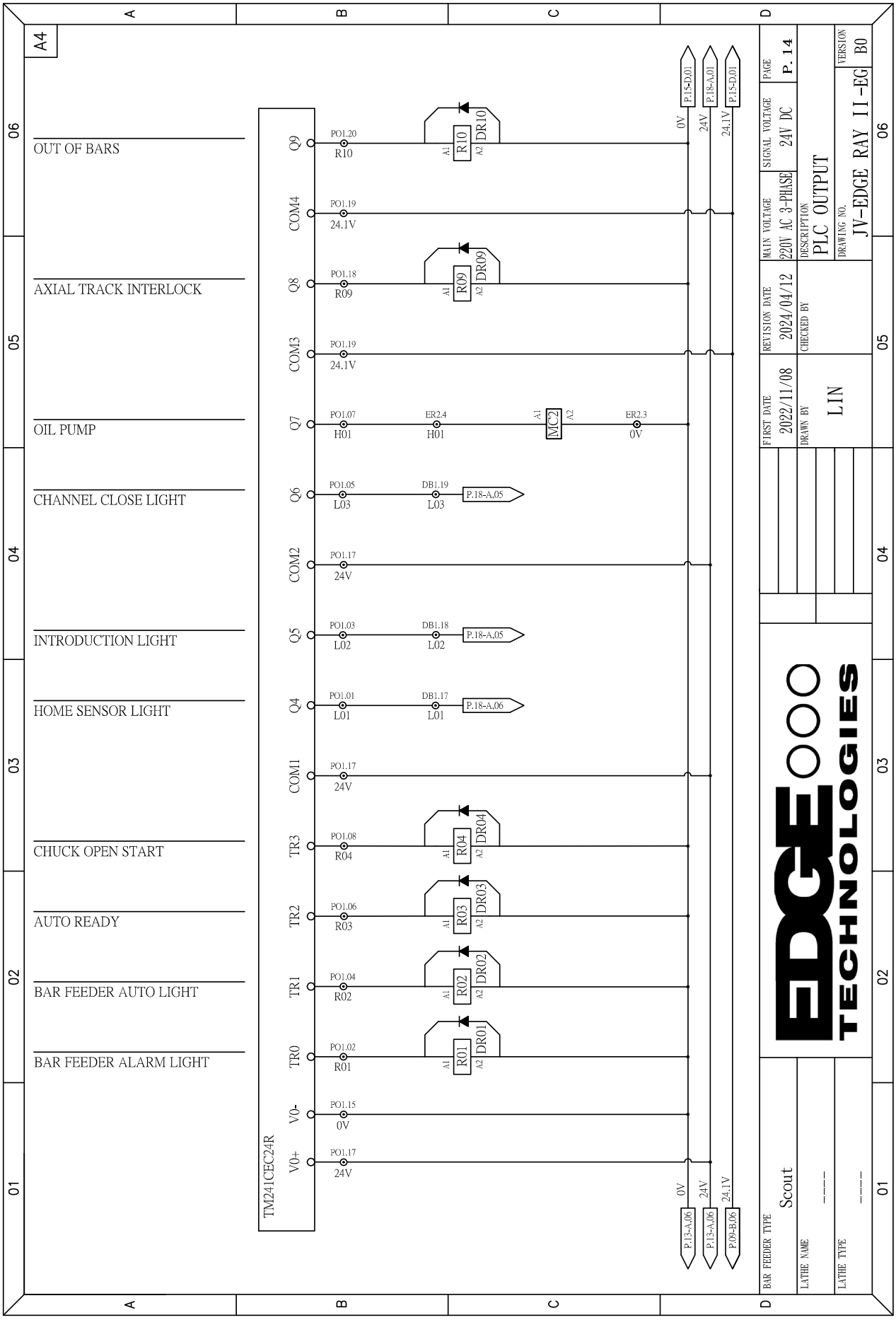
A4
OUT OF BARS
AXIAL TRACK INTERLOCK
OIL PUMP
CHANNEL CLOSE LIGHT
INTRODUCTION LIGHT
HOME SENSOR LIGHT
CHUCK OPEN START
AUTO READY
BAR FEEDER AUTO LIGHT
BAR FEEDER ALARM LIGHT
TM241CEC24R
Q9
COM4
Q8
COM3
Q7
Q6
COM2
Q5
Q4
COM1
TR3
TR2
TR1
TR0
V0-
V0+
PO1.20
R10
PO1.19
24.1V
PO1.18
R09
PO1.19
24.1V
PO1.07
H01
ER2.4
H01
MC2
ER2.3
0V
PO1.05
L03
DB1.19
L03
P.18-A.05
PO1.17
24V
PO1.03
L02
DB1.18
L02
P.18-A.05
PO1.01
L01
DB1.17
L01
P.18-A.06
PO1.17
24V
PO1.08
R04
PO1.06
R03
PO1.04
R02
PO1.02
R01
PO1.15
0V
PO1.17
24V
DR10
DR09
DR04
DR03
DR02
DR01
P.15-D.01
P.18-A.01
P.15-D.01
P.13-A.06
P.13-A.06
P.09-B.06
0V
24V
24.1V
PAGE
P. 14
VERSION
B0
SIGNAL VOLTAGE
24V DC
MAIN VOLTAGE
220V AC 3-PHASE
DESCRIPTION
PLC OUTPUT
DRAWING NO.
JV-EDGE RAY II-EG
REVISION DATE
2024/04/12
CHECKED BY
FIRST DATE
2022/11/08
DRAWN BY
LIN
EDGE TECHNOLOGIES
BAR FEEDER TYPE
Scout
LATHE NAME
LATHE TYPE

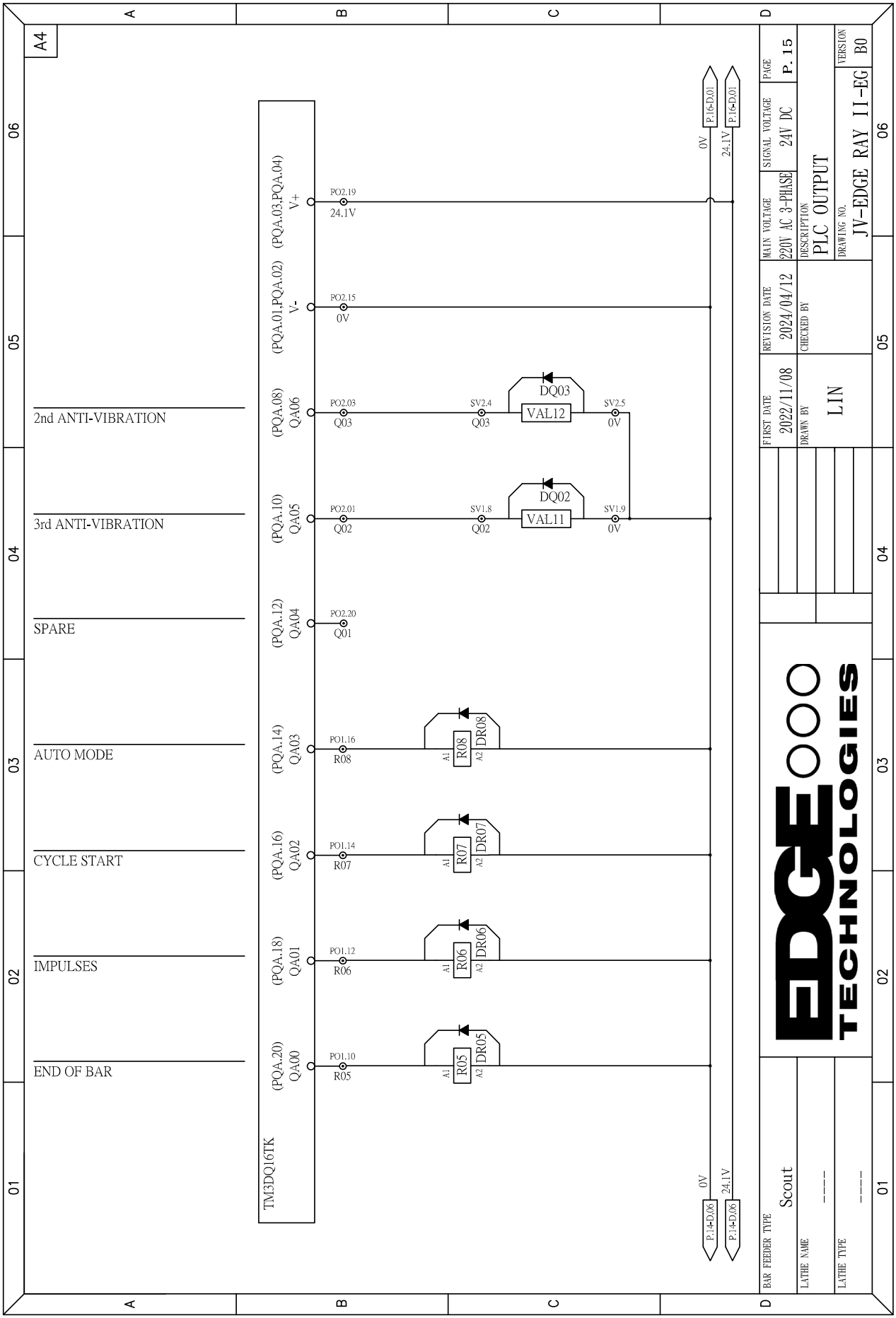
A4
TM3DQ16TK
(PQA.03,PQA.04) V+
(PQA.01,PQA.02) V-
(PQA.08) QA06
(PQA.10) QA05
(PQA.12) QA04
(PQA.14) QA03
(PQA.16) QA02
(PQA.18) QA01
(PQA.20) QA00
PO2.19 24.1V
PO2.15 0V
PO2.03 Q03
PO2.01 Q02
PO2.20 Q01
PO1.16 R08
PO1.14 R07
PO1.12 R06
PO1.10 R05
SV2.4 Q03
SV2.5 0V
SV1.8 Q02
SV1.9 0V
DQ03
VAL12
DQ02
VAL11
R08
DR08
R07
DR07
R06
DR06
R05
DR05
A1
A2
2nd ANTI-VIBRATION
3rd ANTI-VIBRATION
SPARE
AUTO MODE
CYCLE START
IMPULSES
END OF BAR
0V
24.1V
P.16-D.01
P.14-D.06
P.14-D.01
BAR FEEDER TYPE
Scout
LATHE NAME
LATHE TYPE
FIRST DATE
2022/11/08
DRAWN BY
LIN
REVISION DATE
2024/04/12
CHECKED BY
MAIN VOLTAGE
220V AC 3-PHASE
SIGNAL VOLTAGE
24V DC
PAGE
P. 15
DESCRIPTION
PLC OUTPUT
DRAWING NO.
JV-EDGE RAY II-EG
VERSION
B0
EDGE TECHNOLOGIES

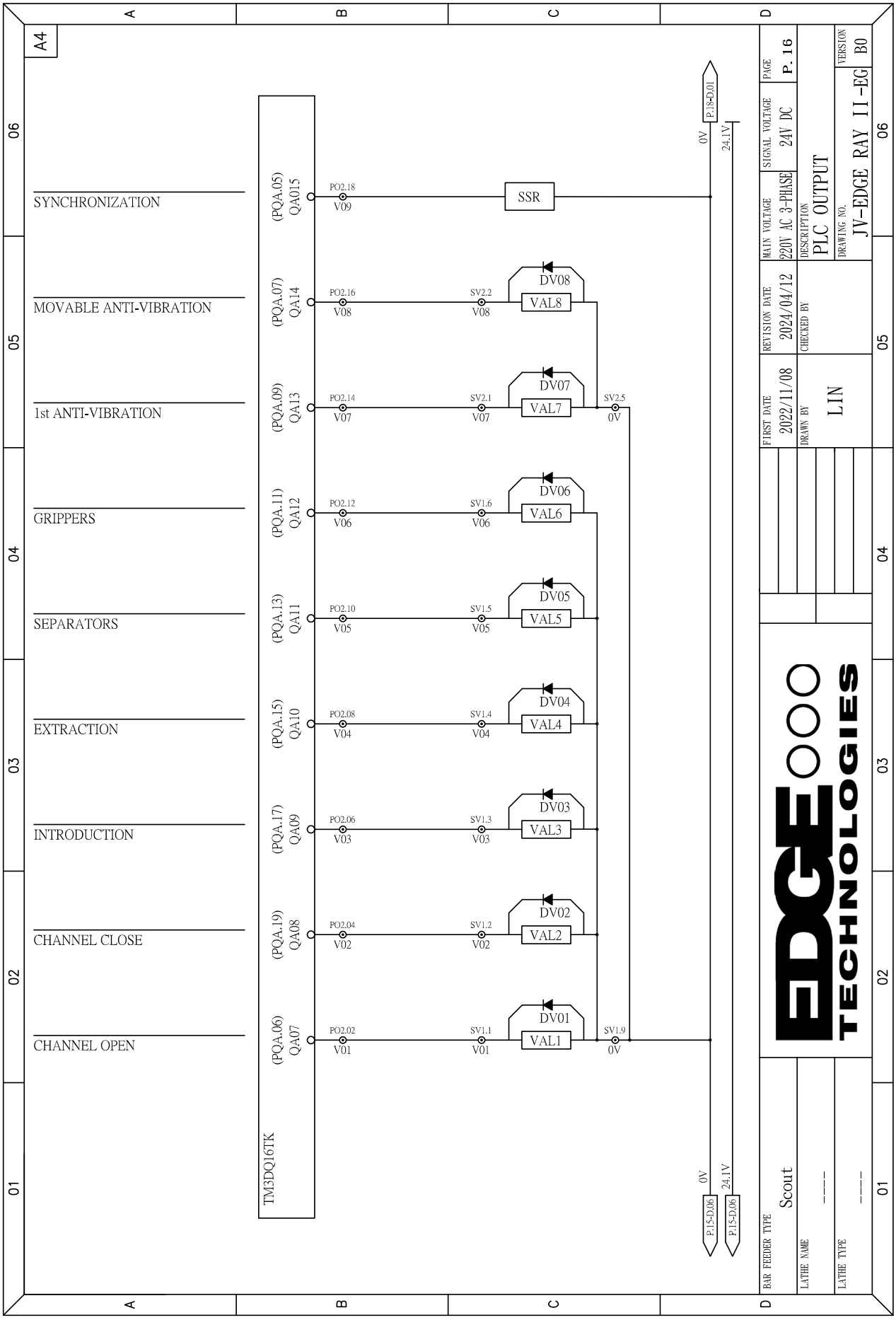
A4
SYNCHRONIZATION
MOVABLE ANTI-VIBRATION
1st ANTI-VIBRATION
GRIPPERS
SEPARATORS
EXTRACTION
INTRODUCTION
CHANNEL CLOSE
CHANNEL OPEN
TM3DQ16TK
(PQA.05) QA015
(PQA.07) QA14
(PQA.09) QA13
(PQA.11) QA12
(PQA.13) QA11
(PQA.15) QA10
(PQA.17) QA09
(PQA.19) QA08
(PQA.06) QA07
PO2.18 V09
PO2.16 V08
PO2.14 V07
PO2.12 V06
PO2.10 V05
PO2.08 V04
PO2.06 V03
PO2.04 V02
PO2.02 V01
SSR
DV08 VAL8
DV07 VAL7
DV06 VAL6
DV05 VAL5
DV04 VAL4
DV03 VAL3
DV02 VAL2
DV01 VAL1
SV2.2 V08
SV2.1 V07
SV1.6 V06
SV1.5 V05
SV1.4 V04
SV1.3 V03
SV1.2 V02
SV1.1 V01
SV2.5 0V
SV1.9 0V
0V
24.1V
P.18-D.01
P.15-D.06
P.15-D.06
PAGE P. 16
SIGNAL VOLTAGE 24V DC
MAIN VOLTAGE 220V AC 3-PHASE
DESCRIPTION PLC OUTPUT
DRAWING NO. JV-EDGE RAY II-EG
VERSION B0
REVISION DATE 2024/04/12
CHECKED BY
FIRST DATE 2022/11/08
DRAWN BY LIN
EDGE TECHNOLOGIES
BAR FEEDER TYPE Scout
LATHE NAME ----
LATHE TYPE ----

A4

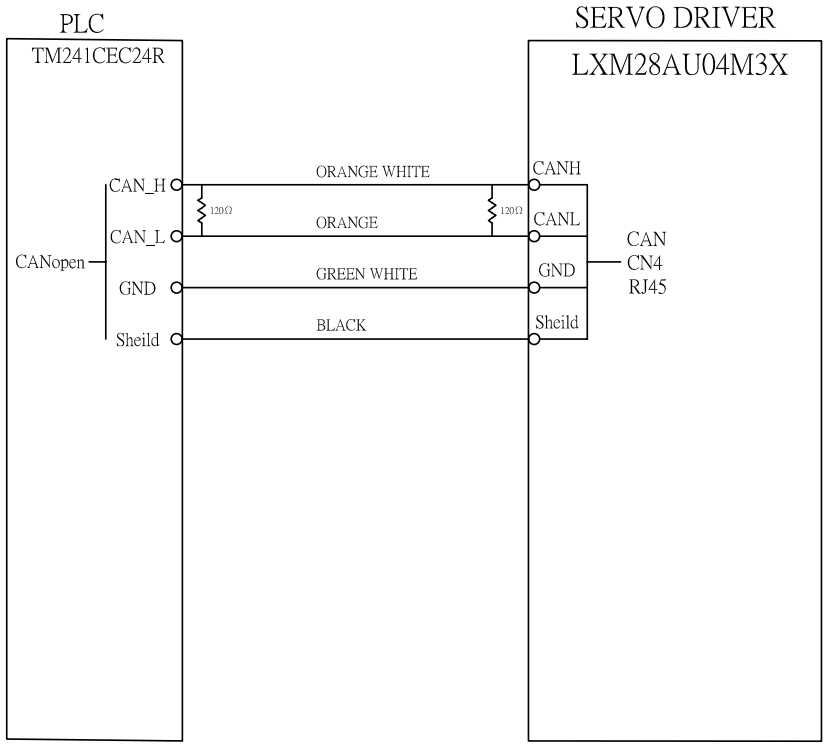

BAR FEEDER TYPE: Scout	EDGE TECHNOLOGIES	FIRST DATE: 2022/11/08	REVISION DATE: 2024/04/12	MAIN VOLTAGE: 220V AC 3-PHASE	SIGNAL VOLTAGE: 24V DC	PAGE: P. 17	
LATHE NAME: ----		DRAWN BY: LIN	CHECKED BY:	DESCRIPTION: CANopen circuit of Servo motor			
LATHE TYPE: ----				DRAWING NO.: JV-EDGE RAY II-EG		VERSION: B0	

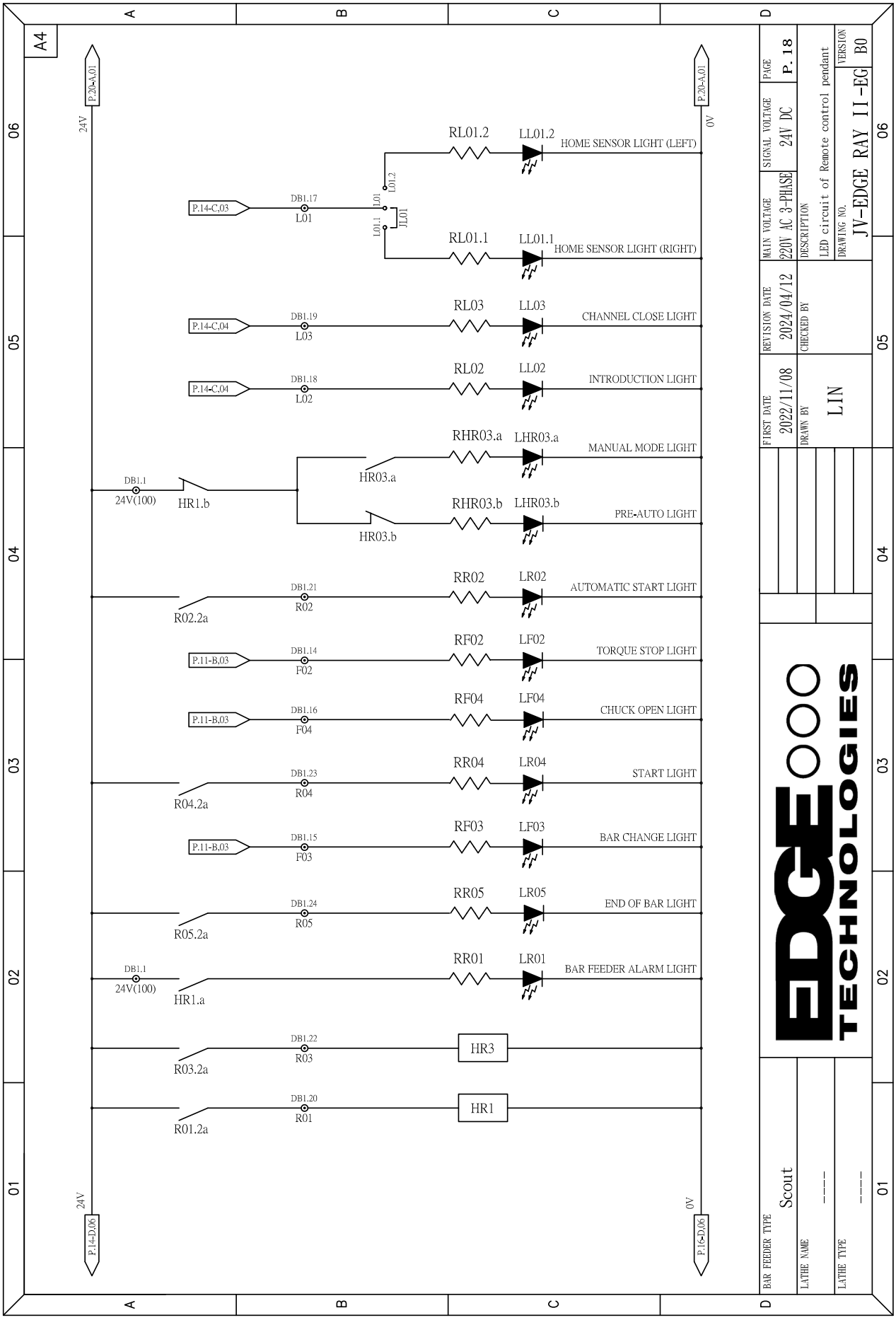
A4
24V
P.20-A.01
0V
P.20-A.01
RL01.2
LL01.2
HOME SENSOR LIGHT (LEFT)
P.14-C.03
DB1.17
L01
L01
L01.2
L01.1
LL01
RL01.1
LL01.1
HOME SENSOR LIGHT (RIGHT)
RL03
LL03
CHANNEL CLOSE LIGHT
P.14-C.04
DB1.19
L03
RL02
LL02
INTRODUCTION LIGHT
P.14-C.04
DB1.18
L02
RHR03.a
LHR03.a
MANUAL MODE LIGHT
HR03.a
DB1.1
24V(100)
HR1.b
RHR03.b
LHR03.b
PRE-AUTO LIGHT
HR03.b
RR02
LR02
AUTOMATIC START LIGHT
DB1.21
R02
R02.2a
RF02
LF02
TORQUE STOP LIGHT
P.11-B.03
DB1.14
F02
RF04
LF04
CHUCK OPEN LIGHT
P.11-B.03
DB1.16
F04
RR04
LR04
START LIGHT
DB1.23
R04
R04.2a
RF03
LF03
BAR CHANGE LIGHT
P.11-B.03
DB1.15
F03
RR05
LR05
END OF BAR LIGHT
DB1.24
R05
R05.2a
RR01
LR01
BAR FEEDER ALARM LIGHT
DB1.1
24V(100)
HR1.a
DB1.22
R03
HR3
R03.2a
DB1.20
R01
HR1
R01.2a
24V
P.14-D.06
0V
P.16-D.06
PAGE
P. 18
SIGNAL VOLTAGE
24V DC
MAIN VOLTAGE
220V AC 3-PHASE
DESCRIPTION
LED circuit of Remote control pendant
VERSION
B0
DRAWING NO.
JV-EDGE RAY II-EG
REVISION DATE
2024/04/12
CHECKED BY
FIRST DATE
2022/11/08
DRAWN BY
LIN
EDGE TECHNOLOGIES
BAR FEEDER TYPE
Scout
LATHE NAME
LATHE TYPE

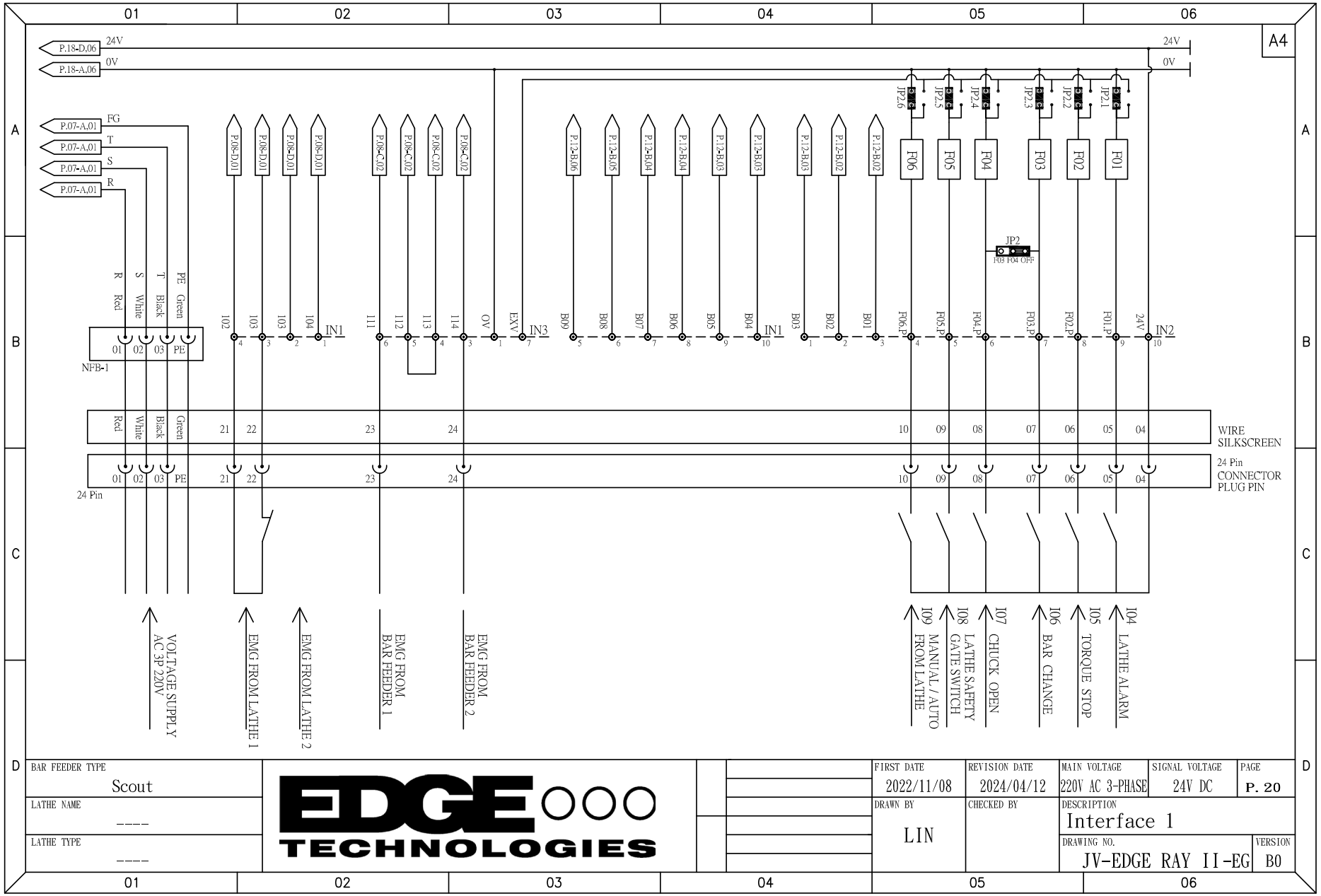
A4
P.18-D,06 24V
P.18-A,06 0V
P.07-A,01 FG
P.07-A,01 T
P.07-A,01 S
P.07-A,01 R
NFB-1
R Red
S White
T Black
PE Green
24 Pin
WIRE SILKSCREEN
24 Pin CONNECTOR PLUG PIN
IN1
IN2
IN3
EXV
0V
24V
JP2
F03 F04 OFF
VOLTAGE SUPPLY AC 3P 220V
EMG FROM LATHE 1
EMG FROM LATHE 2
EMG FROM BAR FEEDER 1
EMG FROM BAR FEEDER 2
109 MANUAL/AUTO FROM LATHE
108 LATHE SAFETY GATE SWITCH
107 CHUCK OPEN
106 BAR CHANGE
105 TORQUE STOP
104 LATHE ALARM
BAR FEEDER TYPE
Scout
LATHE NAME

LATHE TYPE

EDGE TECHNOLOGIES
FIRST DATE
2022/11/08
REVISION DATE
2024/04/12
MAIN VOLTAGE
220V AC 3-PHASE
SIGNAL VOLTAGE
24V DC
PAGE
P. 20
DRAWN BY
LIN
CHECKED BY
DESCRIPTION
Interface 1
DRAWING NO.
JV-EDGE RAY II-EG
VERSION
B0

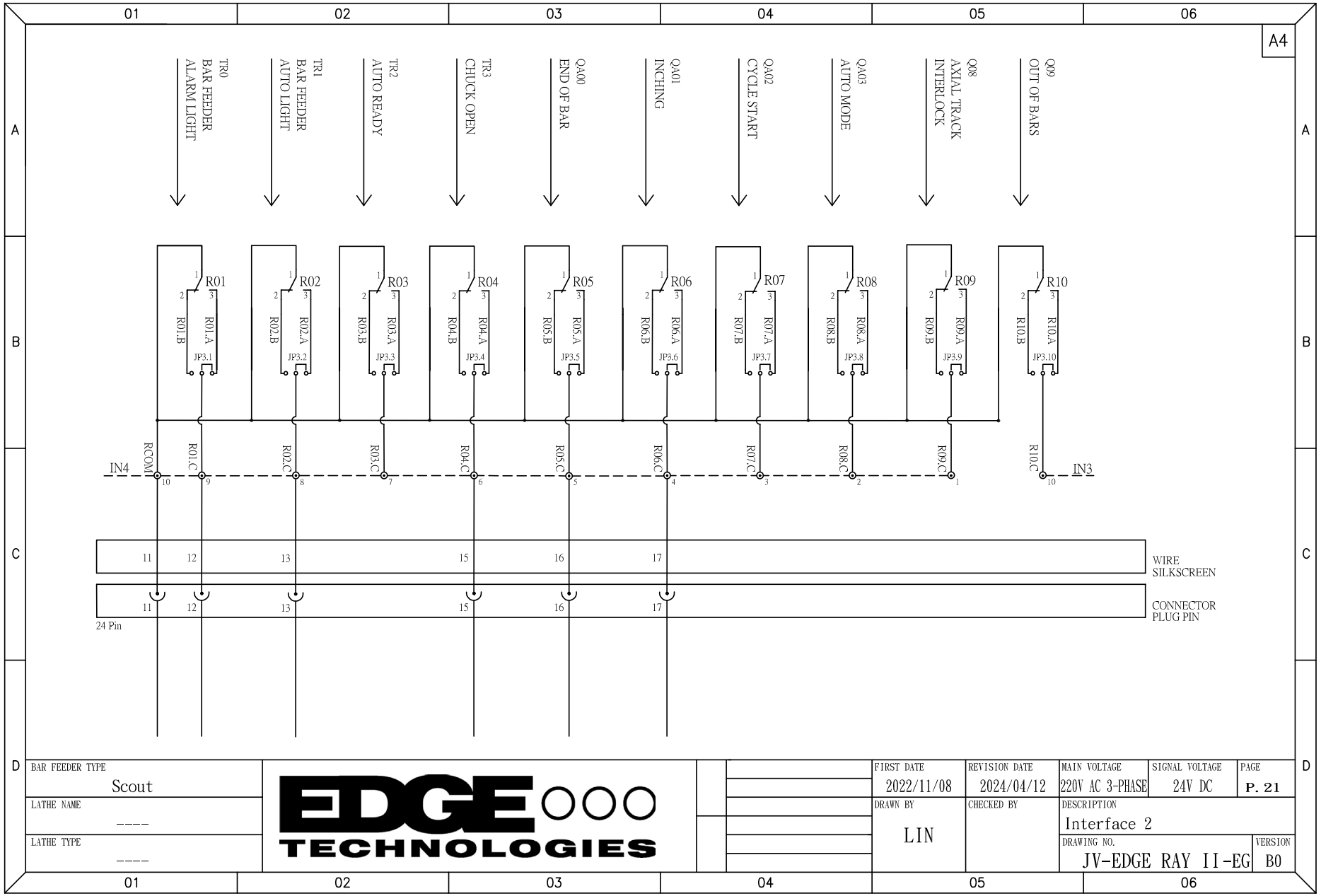
A4
TR0 BAR FEEDER ALARM LIGHT
TR1 BAR FEEDER AUTO LIGHT
TR2 AUTO READY
TR3 CHUCK OPEN
Q.A00 END OF BAR
Q.A01 INCHING
Q.A02 CYCLE START
Q.A03 AUTO MODE
Q08 AXIAL TRACK INTERLOCK
Q09 OUT OF BARS
R01 R02 R03 R04 R05 R06 R07 R08 R09 R10
R01.B R01.A R02.B R02.A R03.B R03.A R04.B R04.A R05.B R05.A R06.B R06.A R07.B R07.A R08.B R08.A R09.B R09.A R10.B R10.A
JP3.1 JP3.2 JP3.3 JP3.4 JP3.5 JP3.6 JP3.7 JP3.8 JP3.9 JP3.10
IN4
RCOM R01.C R02.C R03.C R04.C R05.C R06.C R07.C R08.C R09.C R10.C
IN3
WIRE SILKSCREEN
CONNECTOR PLUG PIN
24 Pin
BAR FEEDER TYPE
Scout
LATHE NAME

LATHE TYPE

EDGE TECHNOLOGIES
FIRST DATE
2022/11/08
REVISION DATE
2024/04/12
MAIN VOLTAGE
220V AC 3-PHASE
SIGNAL VOLTAGE
24V DC
PAGE
P. 21
DRAWN BY
LIN
CHECKED BY
DESCRIPTION
Interface 2
DRAWING NO.
JV-EDGE RAY II-EG
VERSION
B0

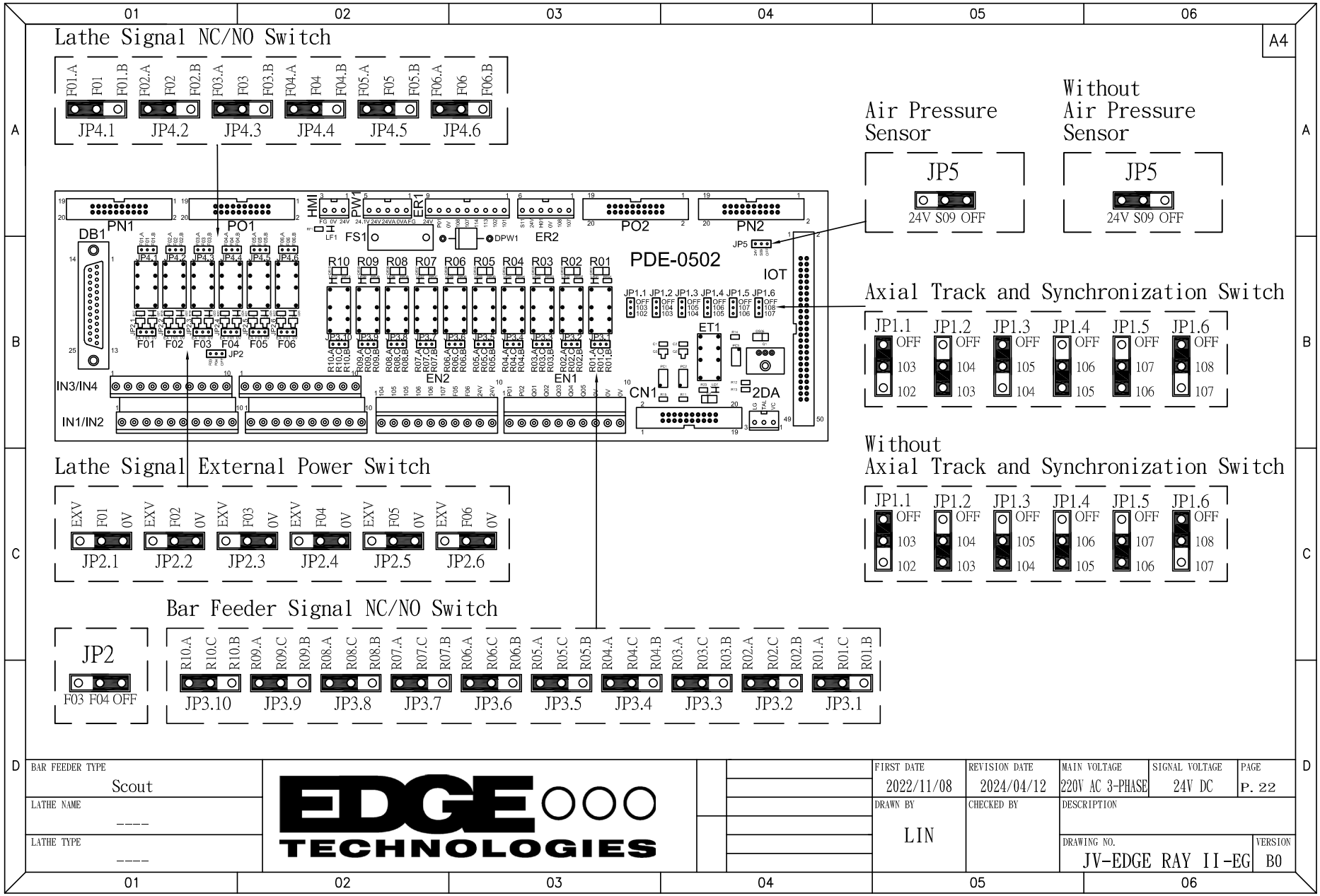
Lathe Signal NC/NO Switch
F01.A F01 F01.B F02.A F02 F02.B F03.A F03 F03.B F04.A F04 F04.B F05.A F05 F05.B F06.A F06 F06.B
JP4.1 JP4.2 JP4.3 JP4.4 JP4.5 JP4.6
Air Pressure Sensor
JP5
24V S09 OFF
Without Air Pressure Sensor
JP5
24V S09 OFF
PN1
PO1
DB1
HMI
PW1
ER1
FS1
DPW1
ER2
PO2
PN2
JP5
PDE-0502
IOT
R10 R09 R08 R07 R06 R05 R04 R03 R02 R01
JP1.1 JP1.2 JP1.3 JP1.4 JP1.5 JP1.6
ET1
EN2
EN1
CN1
2DA
IN3/IN4
IN1/IN2
Axial Track and Synchronization Switch
JP1.1 JP1.2 JP1.3 JP1.4 JP1.5 JP1.6
OFF 103 102
Without Axial Track and Synchronization Switch
JP1.1 JP1.2 JP1.3 JP1.4 JP1.5 JP1.6
OFF 103 102
Lathe Signal External Power Switch
EXV F01 0V EXV F02 0V EXV F03 0V EXV F04 0V EXV F05 0V EXV F06 0V
JP2.1 JP2.2 JP2.3 JP2.4 JP2.5 JP2.6
Bar Feeder Signal NC/NO Switch
JP2
F03 F04 OFF
R10.A R10.C R10.B R09.A R09.C R09.B R08.A R08.C R08.B R07.A R07.C R07.B R06.A R06.C R06.B R05.A R05.C R05.B R04.A R04.C R04.B R03.A R03.C R03.B R02.A R02.C R02.B R01.A R01.C R01.B
JP3.10 JP3.9 JP3.8 JP3.7 JP3.6 JP3.5 JP3.4 JP3.3 JP3.2 JP3.1
A4
BAR FEEDER TYPE
Scout
LATHE NAME

LATHE TYPE

EDGE TECHNOLOGIES
FIRST DATE
2022/11/08
REVISION DATE
2024/04/12
MAIN VOLTAGE
220V AC 3-PHASE
SIGNAL VOLTAGE
24V DC
PAGE
P. 22
DRAWN BY
LIN
CHECKED BY
DESCRIPTION
DRAWING NO.
JV-EDGE RAY II-EG
VERSION
B0

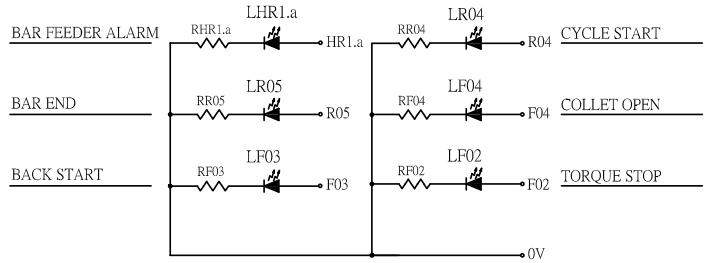

PGE 0502 KEY BOARD

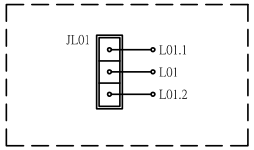

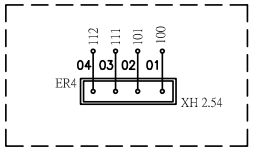

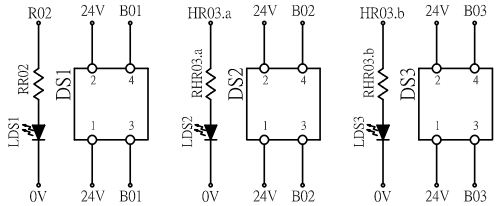

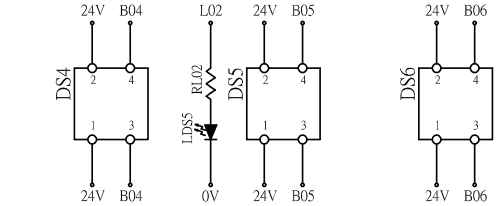

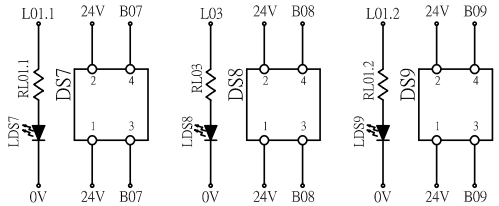

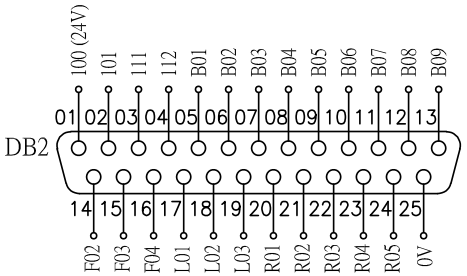

BAR FEEDER TYPE: Scout	EDGE TECHNOLOGIES	FIRST DATE: 2022/11/08	REVISION DATE: 2024/04/12	MAIN VOLTAGE: 220V AC 3-PHASE	SIGNAL VOLTAGE: 24V DC	PAGE: P. 23
LATHE NAME: ----		DRAWN BY: LIN	CHECKED BY:	DESCRIPTION: PC board circuit of Remote control pendant		
LATHE TYPE: ----				DRAWING NO.: JV-EDGE RAY II-EG		VERSION: B0

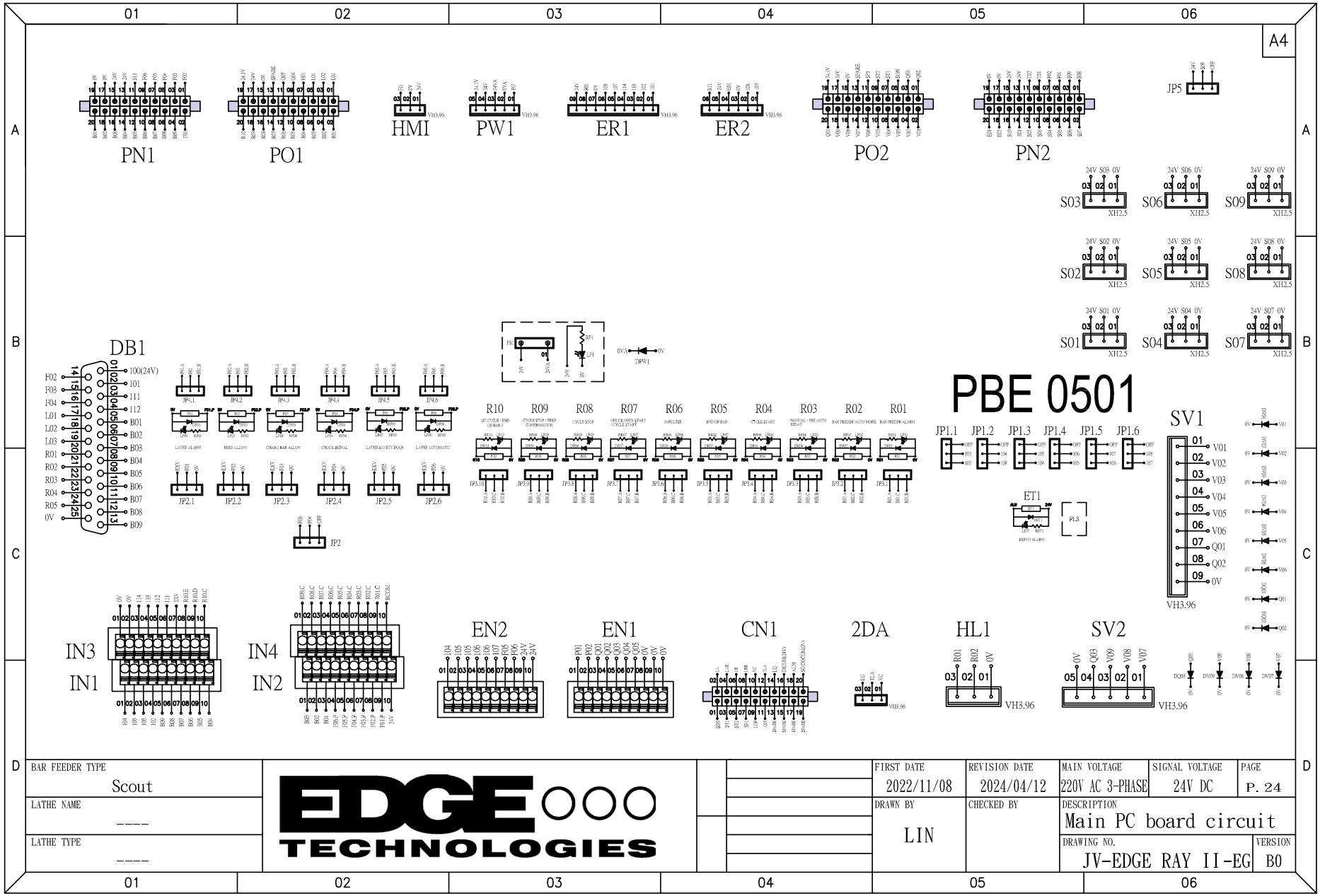
A4
PN1
PO1
HMI
PW1
ER1
ER2
PO2
PN2
JP5
S03
S06
S09
S02
S05
S08
S01
S04
S07
DB1
JP4.1
JP4.2
JP4.3
JP4.4
JP4.5
JP4.6
JP2.1
JP2.2
JP2.3
JP2.4
JP2.5
JP2.6
JP2
R10
R09
R08
R07
R06
R05
R04
R03
R02
R01
DPW1
PBE 0501
JP1.1
JP1.2
JP1.3
JP1.4
JP1.5
JP1.6
ET1
SV1
IN3
IN1
IN4
IN2
EN2
EN1
CN1
2DA
HL1
SV2
BAR FEEDER TYPE
Scout
LATHE NAME
LATHE TYPE
EDGE TECHNOLOGIES
FIRST DATE
2022/11/08
REVISION DATE
2024/04/12
MAIN VOLTAGE
220V AC 3-PHASE
SIGNAL VOLTAGE
24V DC
PAGE
P. 24
DRAWN BY
LIN
CHECKED BY
DESCRIPTION
Main PC board circuit
DRAWING NO.
JV-EDGE RAY II-EG
VERSION
B0

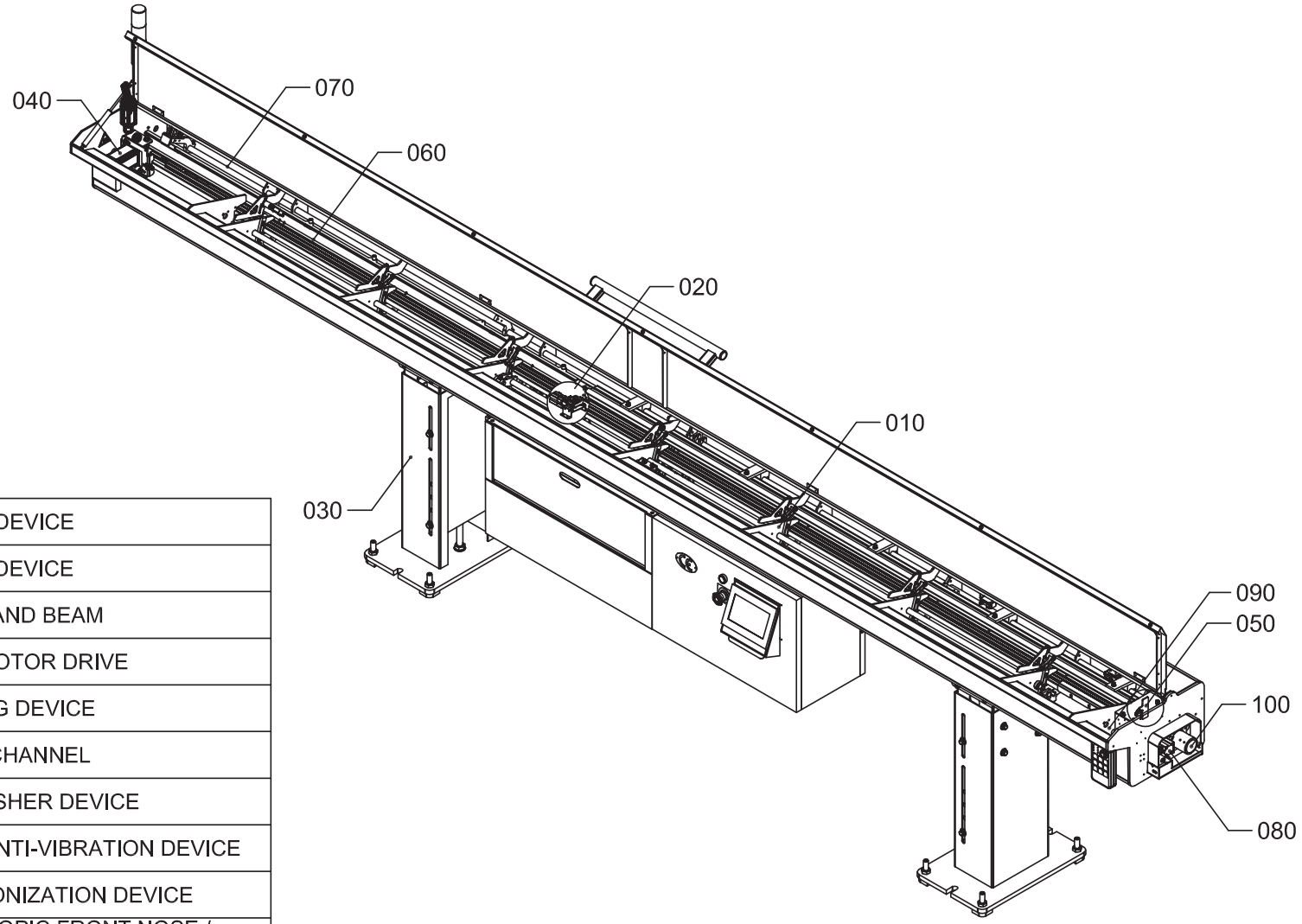

010	FRAME DEVICE
020	CLAMP DEVICE
030	BASES AND BEAM
040	FEED MOTOR DRIVE
050	CUTTING DEVICE
060	GUIDE CHANNEL
070	BAR PUSHER DEVICE
080	FIRST ANTI-VIBRATION DEVICE
090	SYCHRONIZATION DEVICE
100	TELESCOPIC FRONT NOSE / FIXED FRONT NOSE

SCOUT 320

PICTURE INDEX

Tab. 000 4

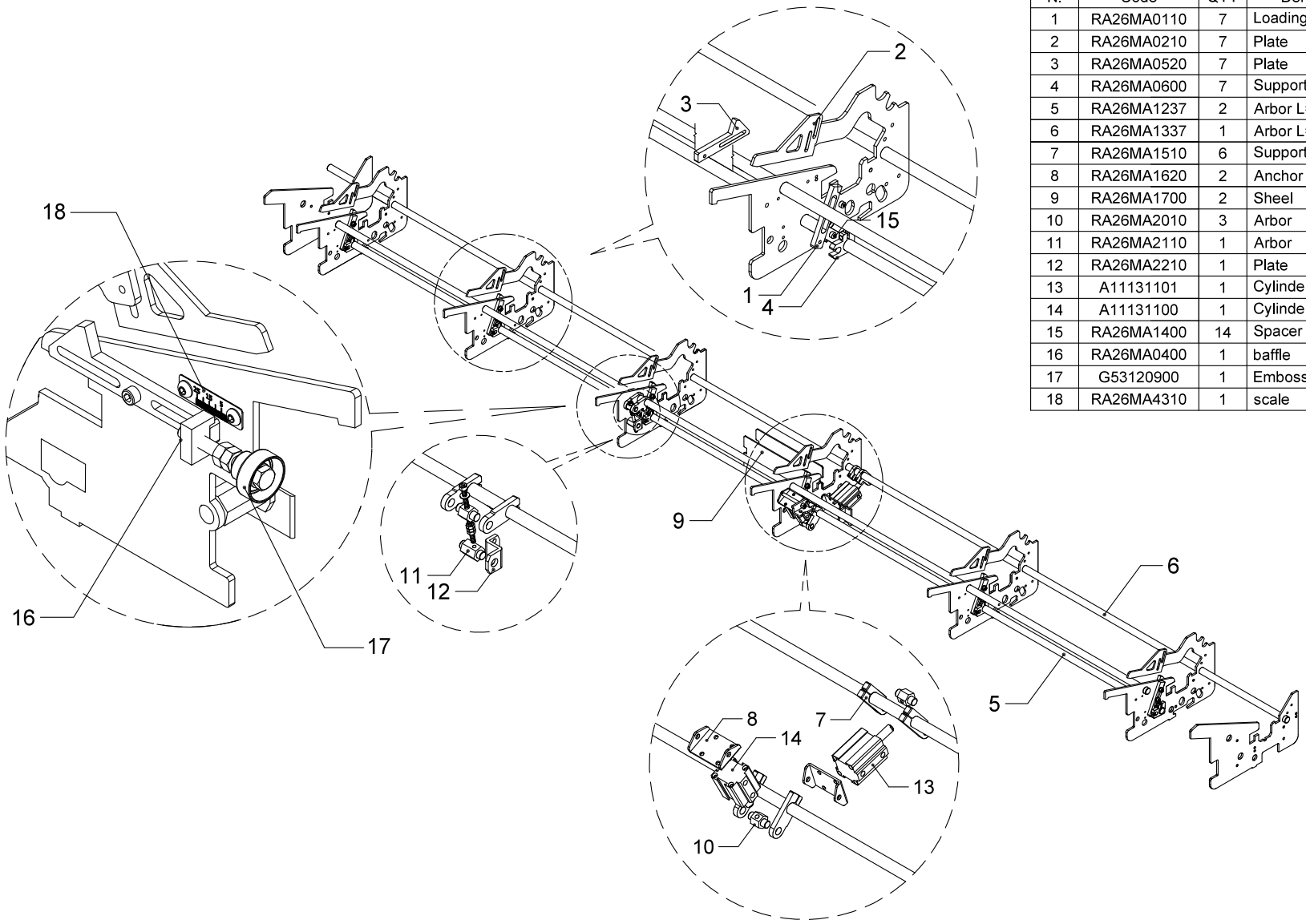

N.	Code	QTY	Denomination
1	RA26MA0110	7	Loading plate
2	RA26MA0210	7	Plate
3	RA26MA0520	7	Plate
4	RA26MA0600	7	Support
5	RA26MA1237	2	Arbor L=3530
6	RA26MA1337	1	Arbor L=4023
7	RA26MA1510	6	Support
8	RA26MA1620	2	Anchor
9	RA26MA1700	2	Sheel
10	RA26MA2010	3	Arbor
11	RA26MA2110	1	Arbor
12	RA26MA2210	1	Plate
13	A11131101	1	Cylinder SDAS-32x30
14	A11131100	1	Cylinder SDA-32x30
15	RA26MA1400	14	Spacer
16	RA26MA0400	1	baffle
17	G53120900	1	Embossed Nut
18	RA26MA4310	1	scale

SCOUT 320

FRAME DEVICE

Tab. 010 3

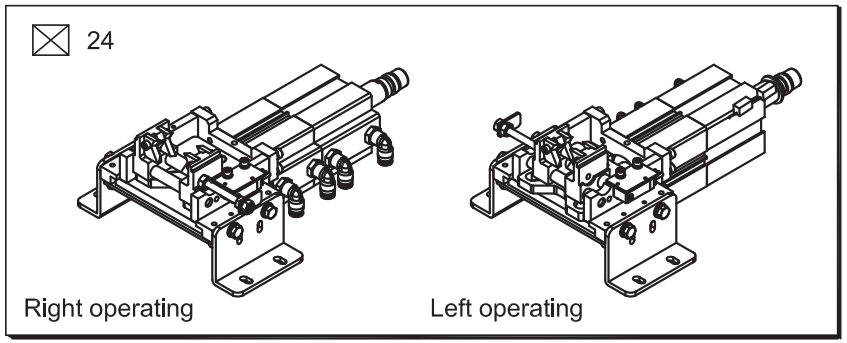

N.	Code	QTY	Denomination
1	A11131801	1	Cylinder SDA-50x30
2	A11131800	1	Cylinder SDAS-50x30
3	A13120100	4	Bended connector SPL 6-02
4	RA26GR1000	2	Plate
5	RA26GR0800	2	Plate
6	RA26GR0410	2	Support
7	RA26GR0600	1	Plate
8	RA26GR1200	1	Sensor shaft
9	RA26GR0510	1	Sliding plate
10	RA26GR0700	1	Sliding plate
11	RA26GR0900	1	Plate
12	RA26GR1900	2	Bushing
13	RA26GR0130	1	Anchort (L)
14	RA26GR0140	1	Anchort (R)
15	RA26GR0300	2	Clip cutter
16	RA26GR0310	2	Clip cutter
17	RA26GR0210	1	Arbor
18	RA26GR0200	1	Arbor
19	RA26GR1300	1	Base
20	A12140501	2	MIcroswitch LY-67A-5M
21	RA26GR1100	1	Bushing
22	J310403	1	Switch D2VW-5-1M
23	RA26GR1400	1	Anchor
24	RA26GR000A	1	Clamp device (Right operating)
	RA26GR001A	1	Clamp device (Left operating)

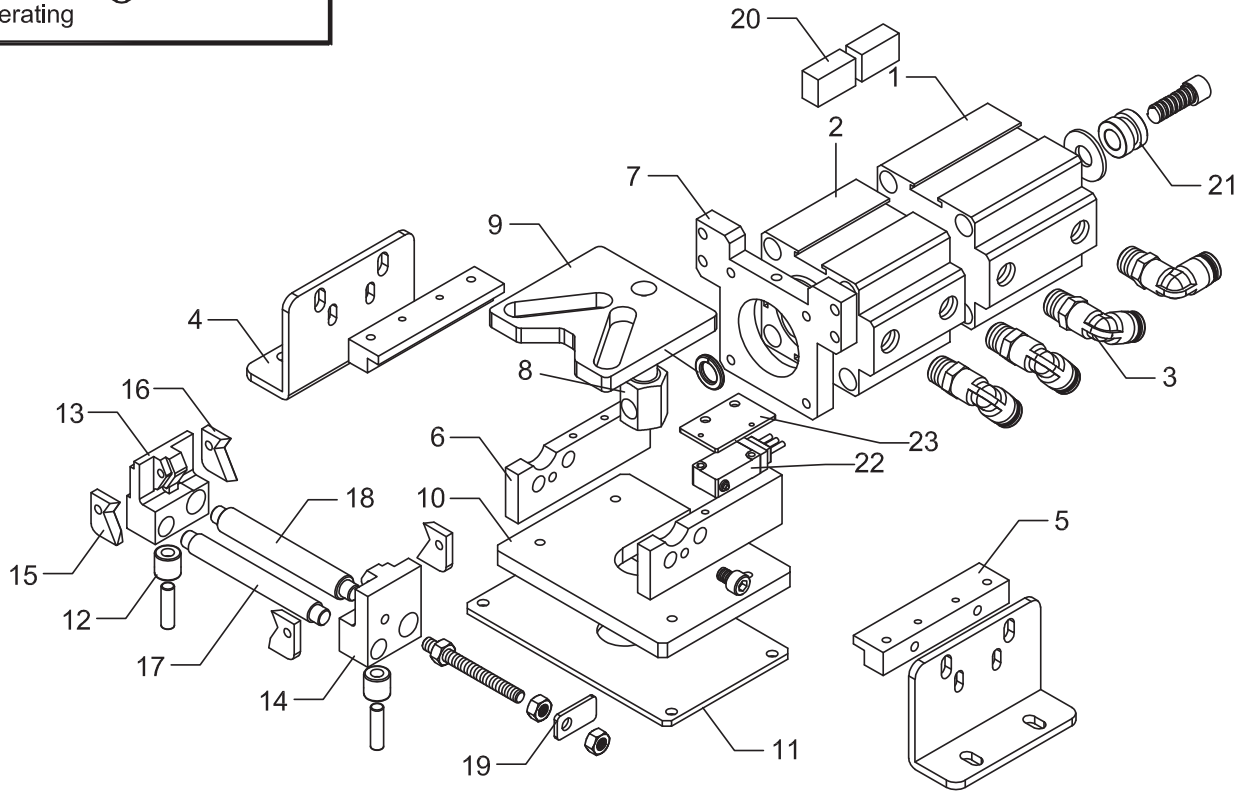

SCOUT 320

CLAMP DEVICE

Tab. 020 3

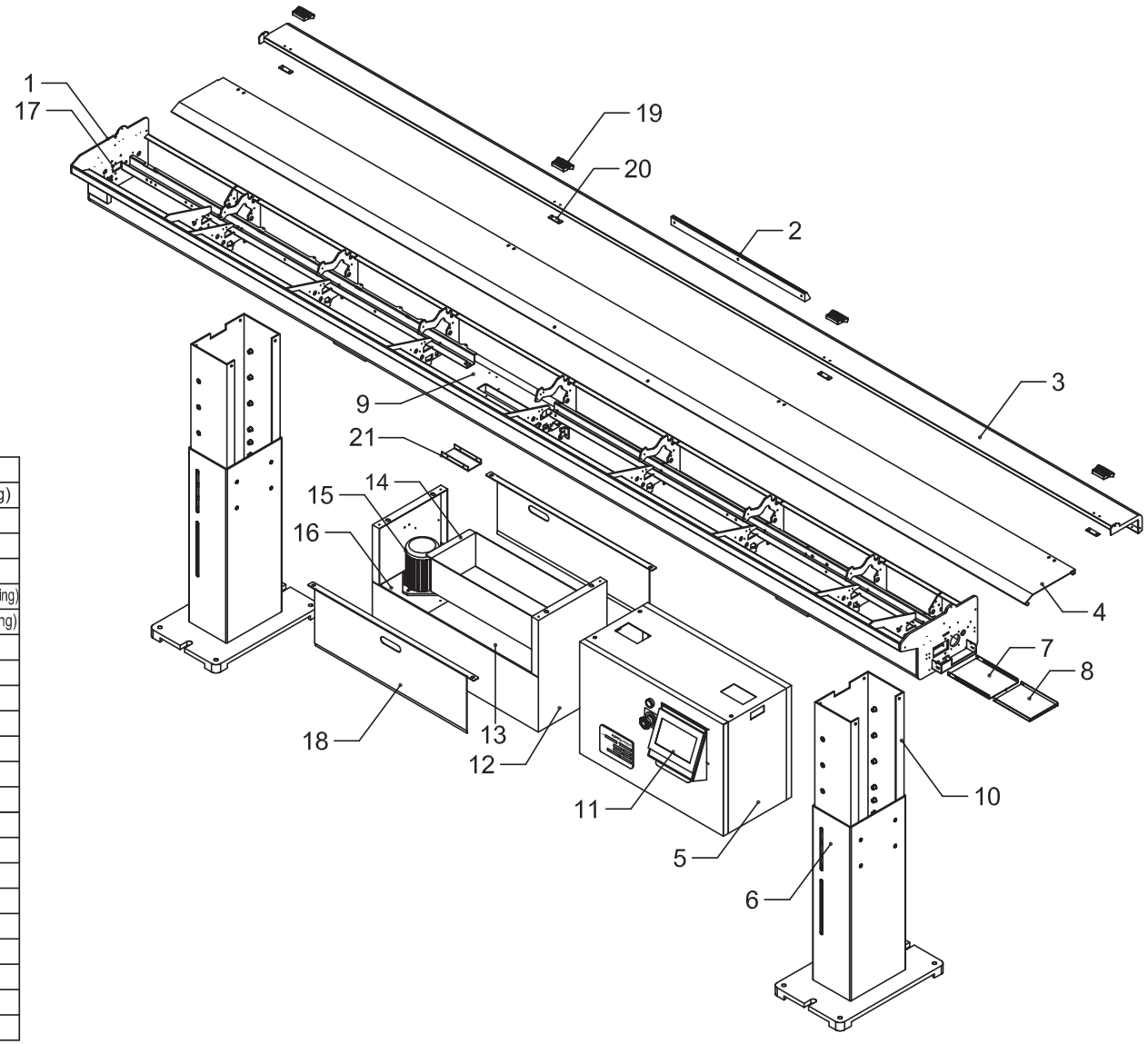

N.	Code	QTY	Denomination
1	RA26BA0637	1	Base (Right operating)
	RA26BA0638	1	Base (Left operating)
2	RA26BA0401	1	Handle
3	RA26BA060437	1	Rear cover
4	RA26BA060537	1	Front cover (Right operating)
	RA26BA060538	1	Front cover (Left operating)
5	P76200602	1	Control box
6	RA26BA0800	2	Lower stand
7	RA26BA0910	1	Oil gathering
8	RA26BA1010	1	Oil gathering
9	RA26BA1200	1	Cover
10	P76200100	2	Log
11	P76200615	1	Control panel
12	RA26OL0100	1	Oil tank
13	RA26OL0200	1	Plate
14	P76200500	1	Remain tank
15	RA26OL0401	1	Pump
16	RA26OL0210	1	Plate
17	RA26BA2900	1	Screw
18	RA26OL0510	2	Door
19	G8112000A	4	Hinge
20	AV51BA3500	8	Plate

SCOUT 320

BASES AND BEAM XL

Tab. 031 4

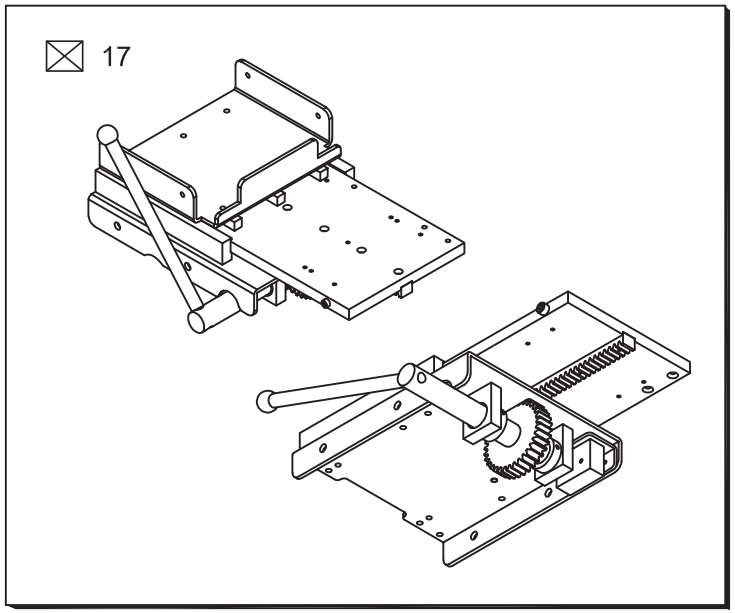

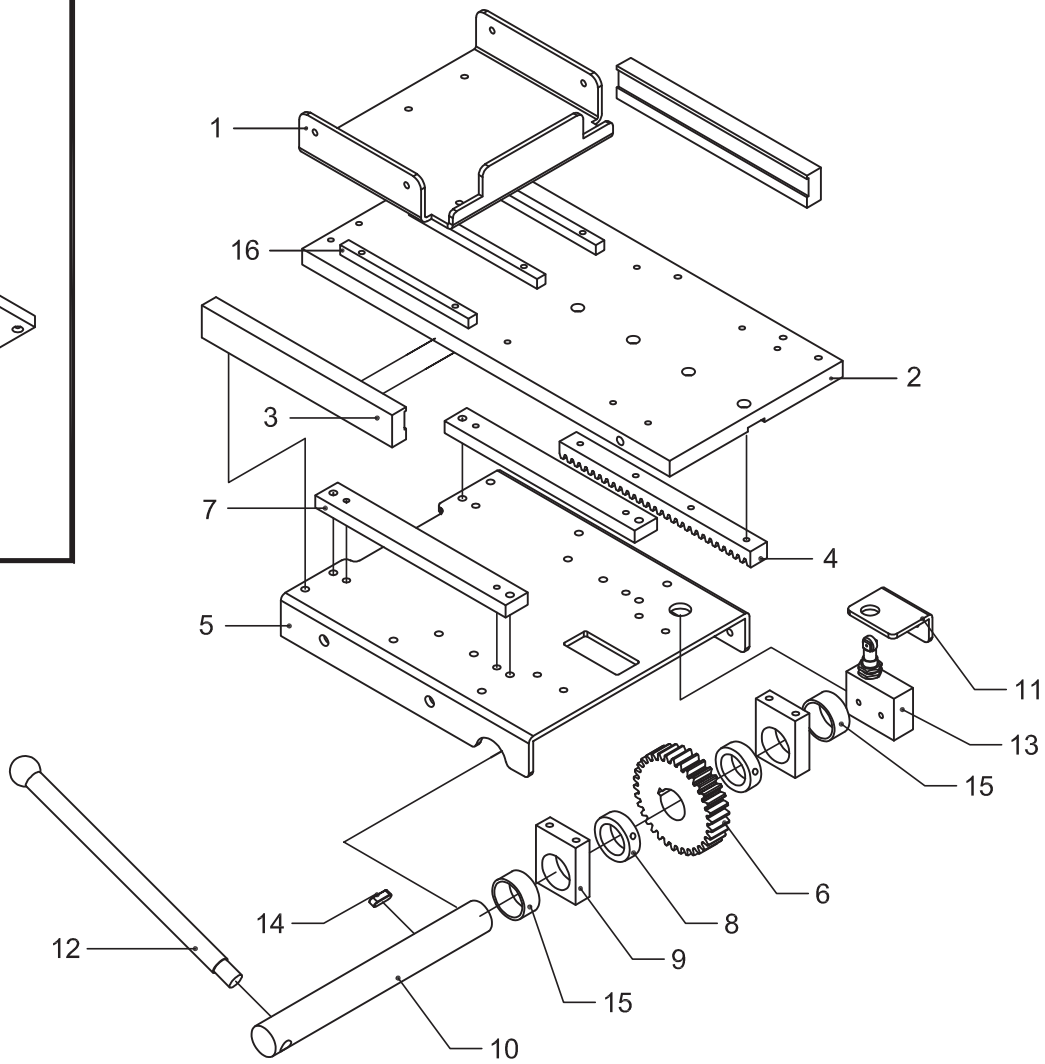

N.	Code	QTY	Denomination
1	RA26MZ1300	1	Plate
2	P35200200	1	Plate
3	P35200300	2	Track
4	P35200400	1	Rack
5	P35200500	1	Plate
6	P35200600	1	Pinion 34T
7	P35200700	2	Support
8	P35200800	2	Ring
9	P35200900	2	Support
10	P35201000	1	Arbor
11	P35201100	1	Plate
12	P35201200	1	Handle
13	J310409	1	Micro switch TZ-7311
14	ZS06060620	1	Shaft key 6x6x20
15	BSF2815	2	Bearing SF-2815
16	RA26MZ1210	3	Support
17	RA26MZ000A	1	Axial track device

SCOUT 320

FRONT TRACKING SYSTEM

Tab. 036 1

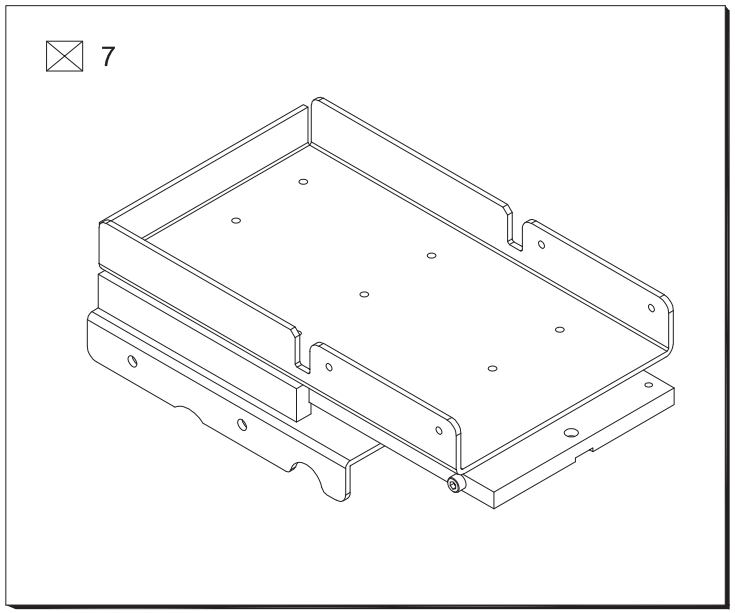

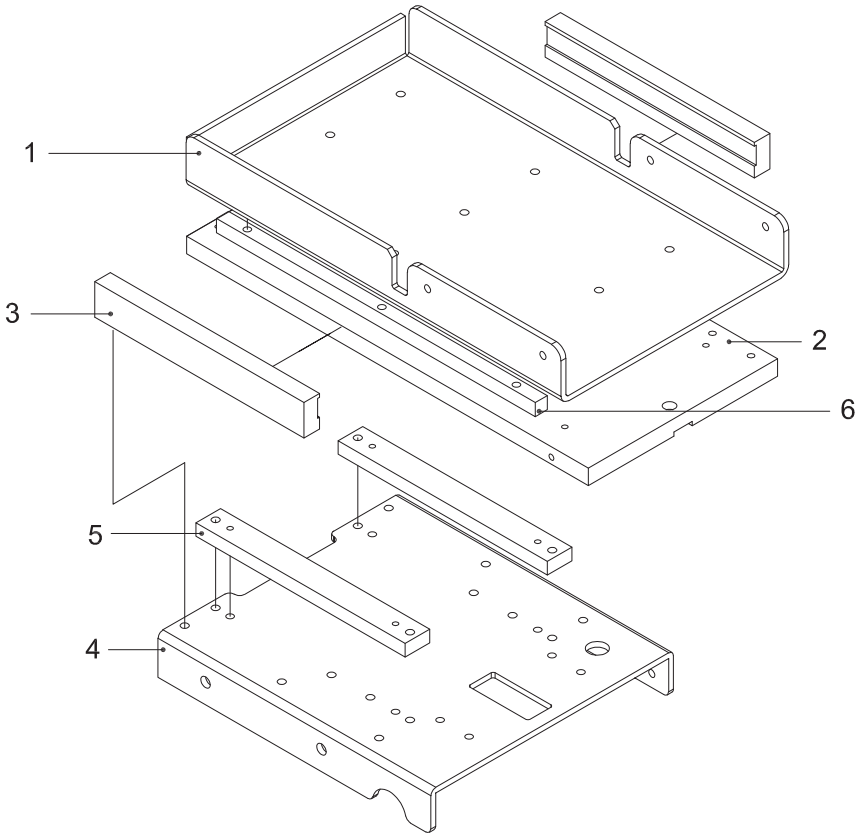

N.	Code	QTY	Denomination
1	RA26MZ1100	1	Plate
2	P35200200	1	Plate
3	P35200300	2	Track
4	P35200500	1	Plate
5	P35200700	2	Support
6	RA26MZ1200	3	Support
7	RA26MZ001A	1	Axial track device

SCOUT 320

BACK TRACKING SYSTEM

Tab. 037 1

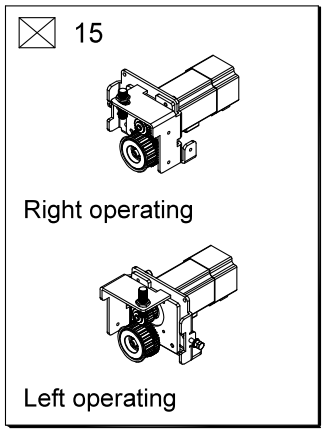

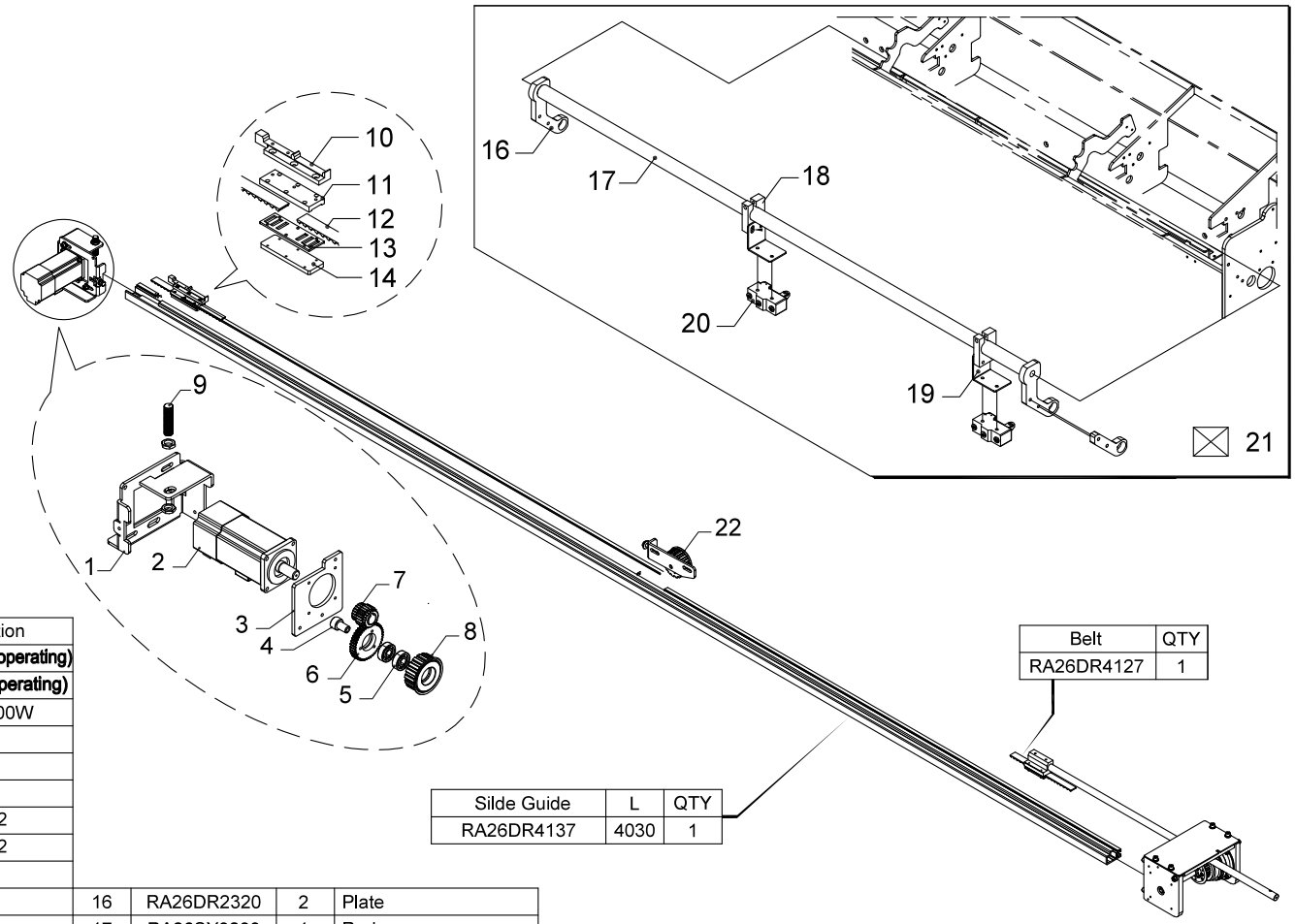

Belt	QTY
RA26DR4127	1

Silde Guide	L	QTY
RA26DR4137	4030	1

N.	Code	QTY	Denomination
1	RA26DR1310	1	Support **(Right operating)**
	RA26DR1340	1	Support **(Left operating)**
2	J212052	1	Servo motor 400W
3	RA26DR1320	1	Plate
4	RA26DR1510	1	Screw
5	B6000ZZ	2	Bearing
6	P48200200	1	Spur gear T=42
7	RA26DR1600	1	Spur gear T=22
8	P48200300	1	Pulley 15T
9	J310339	1	Sensor switch
10	RA26DR0310	1	Carriage
11	RA26DR4200	1	Plate
12	RA26DR4837	1	Belt L=8368
13	RA26DR4300	1	Plate
14	RA26DR4400	1	Plate
15	RA26DR000D	1	Belt driver **(Right operating)**
	RA26DR001D	1	Belt driver **(Left operating)**

16	RA26DR2320	2	Plate
17	RA26SY0200	1	Rod
18	RA26SY0100	2	Seat
19	RA26SY0400	2	Plate
20	JVRA0D002	1	Switch
21	RA26SY000A	1	Safety switch
22	RA26SY000A	1	Synchronized adjustment seat **(Right operating)**
	RA26SY000A	1	Synchronized adjustment seat **(Left operating)**

SCOUT 320

FEED MOTOR DRIVE (SD)

Tab. 041 1

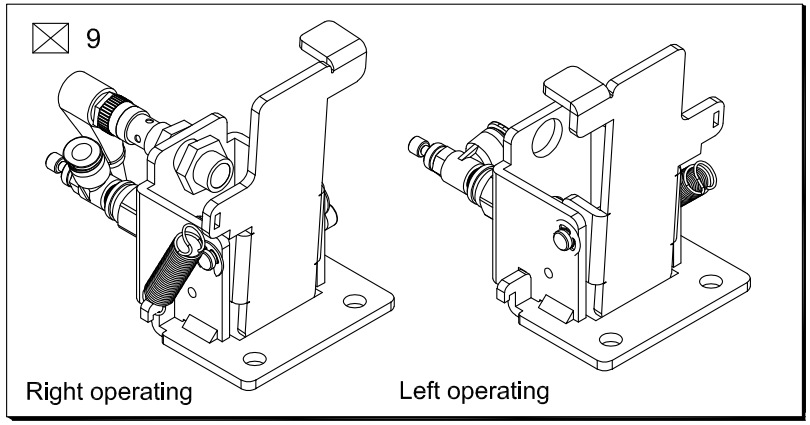

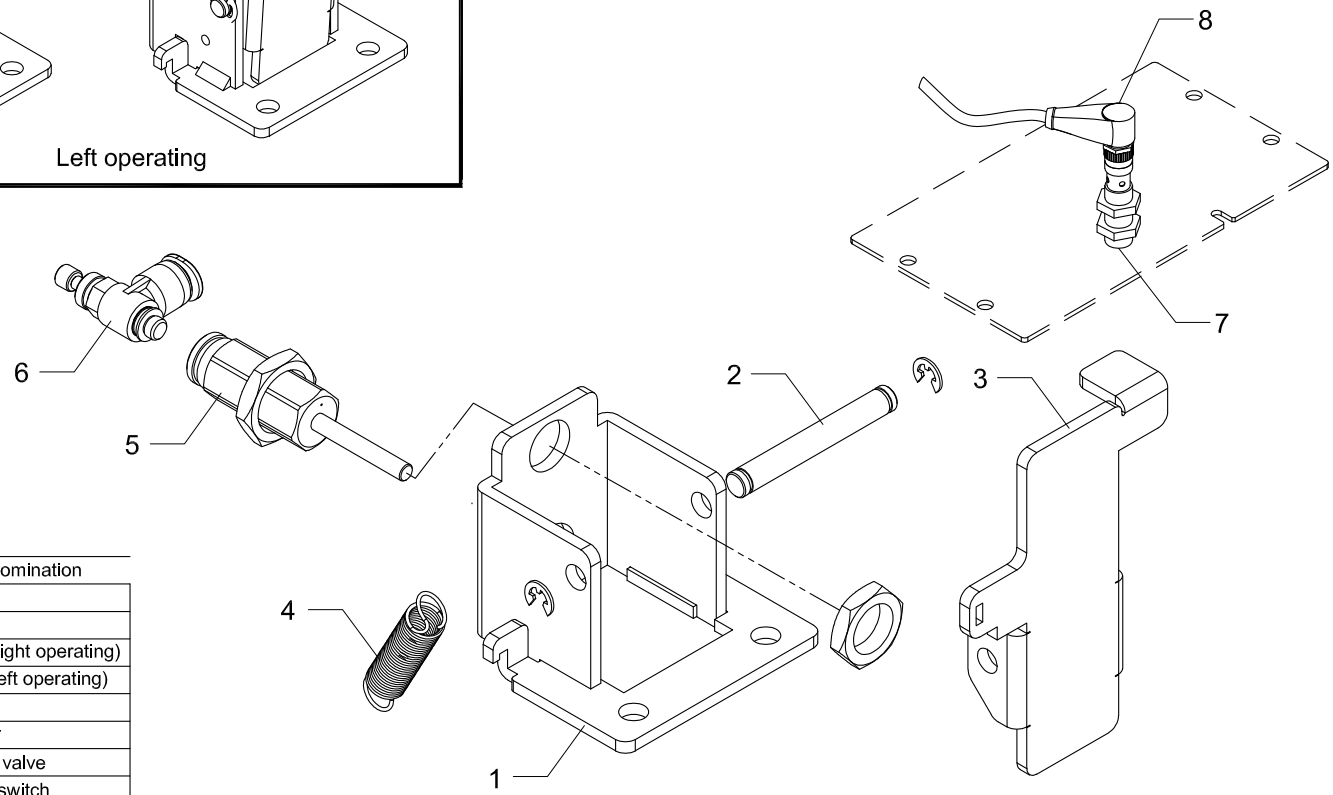

N.	Code	QTY	Denomination
1	RA26FA0600	1	Seat
2	RA26FA0300	1	Shaft
3	RA26FA0411	1	Plate (Right operating)
	RA26FA0412	1	Plate (Left operating)
4	RA26FA0500	1	Spring
5	A11131501	1	Cylinder
6	A12130301	1	Throttle valve
7	J312500	1	Sensor switch
8	J312501	1	Sensor switch line
9	RA26FA010A	1	Cutting device (Right operating)
	RA26FA011A	1	Cutting device (Left operating)

SCOUT 320

CUTTING DEVICE

Tab. 050 4

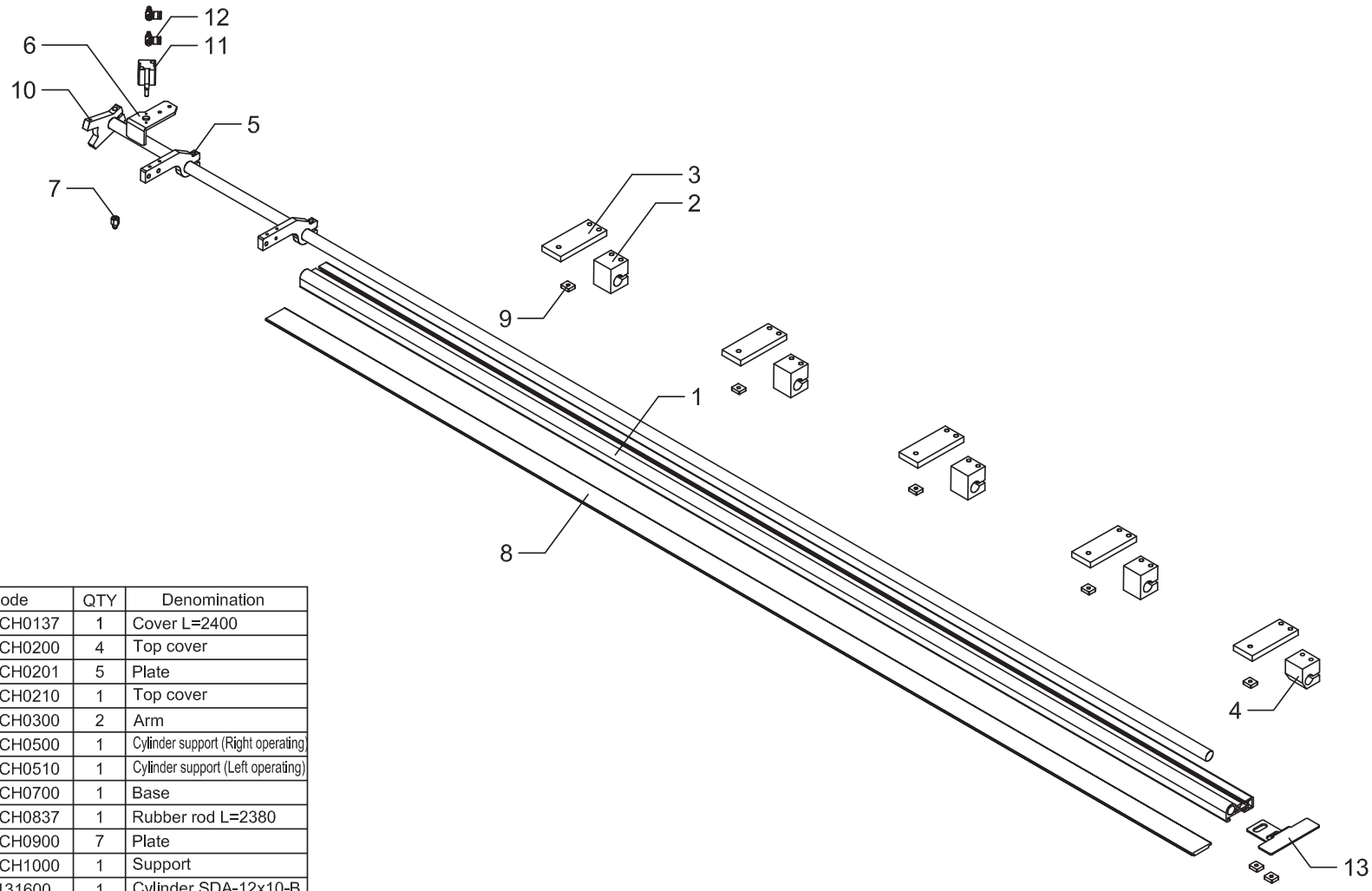

N.	Code	QTY	Denomination
1	RA26CH0137	1	Cover L=2400
2	RA26CH0200	4	Top cover
3	RA26CH0201	5	Plate
4	RA26CH0210	1	Top cover
5	RA26CH0300	2	Arm
6	RA26CH0500	1	Cylinder support (Right operating)
	RA26CH0510	1	Cylinder support (Left operating)
7	RA26CH0700	1	Base
8	RA26CH0837	1	Rubber rod L=2380
9	RA26CH0900	7	Plate
10	RA26CH1000	1	Support
11	A11131600	1	Cylinder SDA-12x10-B
12	A12130300	2	Flow regulatot M5xΦ6
13	RA26CH2300-6	1	Guard plate

SCOUT 320

COVER

Tab. 060 4

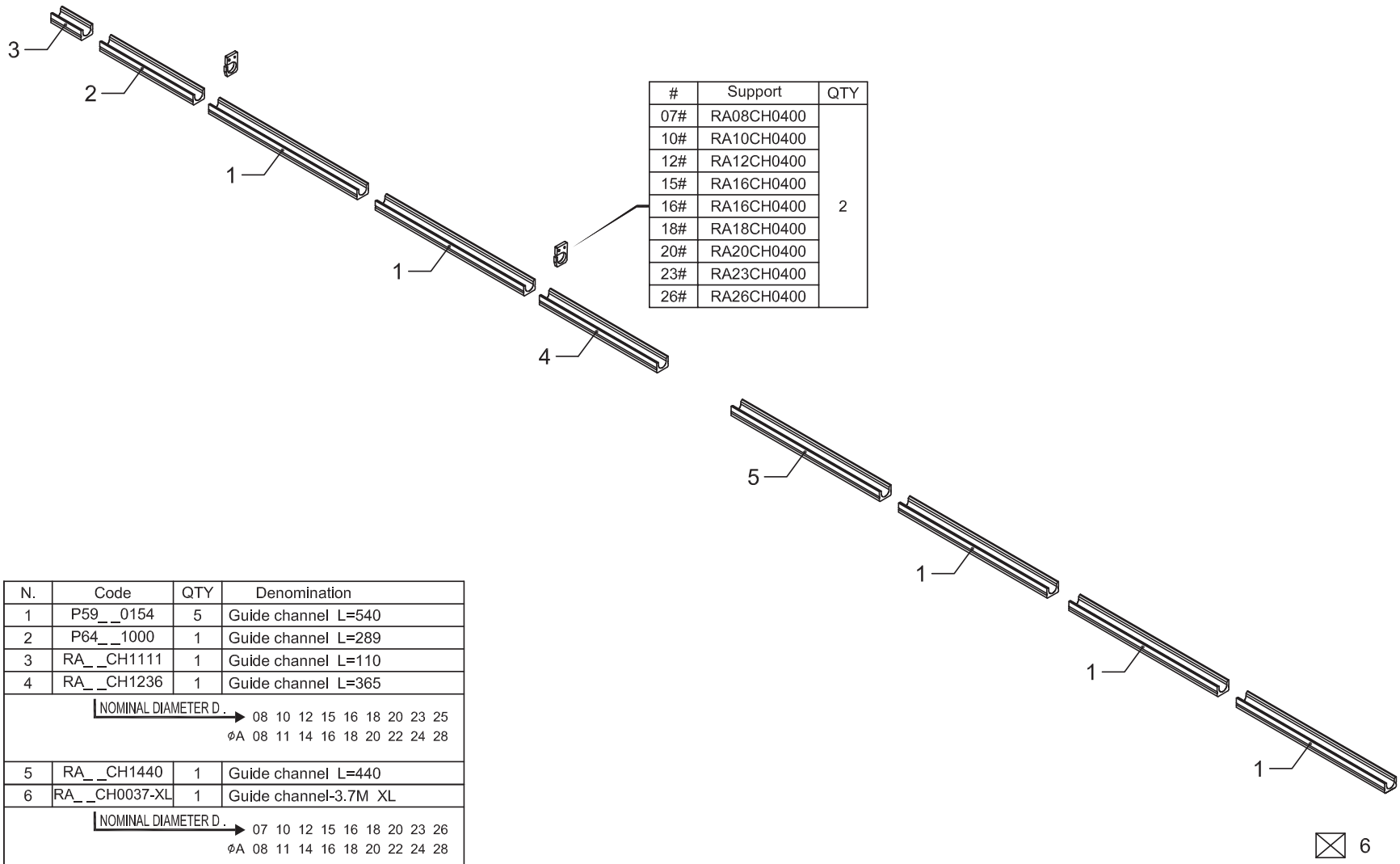

#	Support	QTY
07#	RA08CH0400	2
10#	RA10CH0400	
12#	RA12CH0400	
15#	RA16CH0400	
16#	RA16CH0400	
18#	RA18CH0400	
20#	RA20CH0400	
23#	RA23CH0400	
26#	RA26CH0400	

N.	Code	QTY	Denomination
1	P59_ _0154	5	Guide channel L=540
2	P64_ _1000	1	Guide channel L=289
3	RA_ _CH1111	1	Guide channel L=110
4	RA_ _CH1236	1	Guide channel L=365
	NOMINAL DIAMETER D. →		08 10 12 15 16 18 20 23 25
			ØA 08 11 14 16 18 20 22 24 28
5	RA_ _CH1440	1	Guide channel L=440
6	RA_ _CH0037-XL	1	Guide channel-3.7M XL
	NOMINAL DIAMETER D. →		07 10 12 15 16 18 20 23 26
			ØA 08 11 14 16 18 20 22 24 28

SCOUT 320

GUIDE CHANNE XL

Tab. 064 2

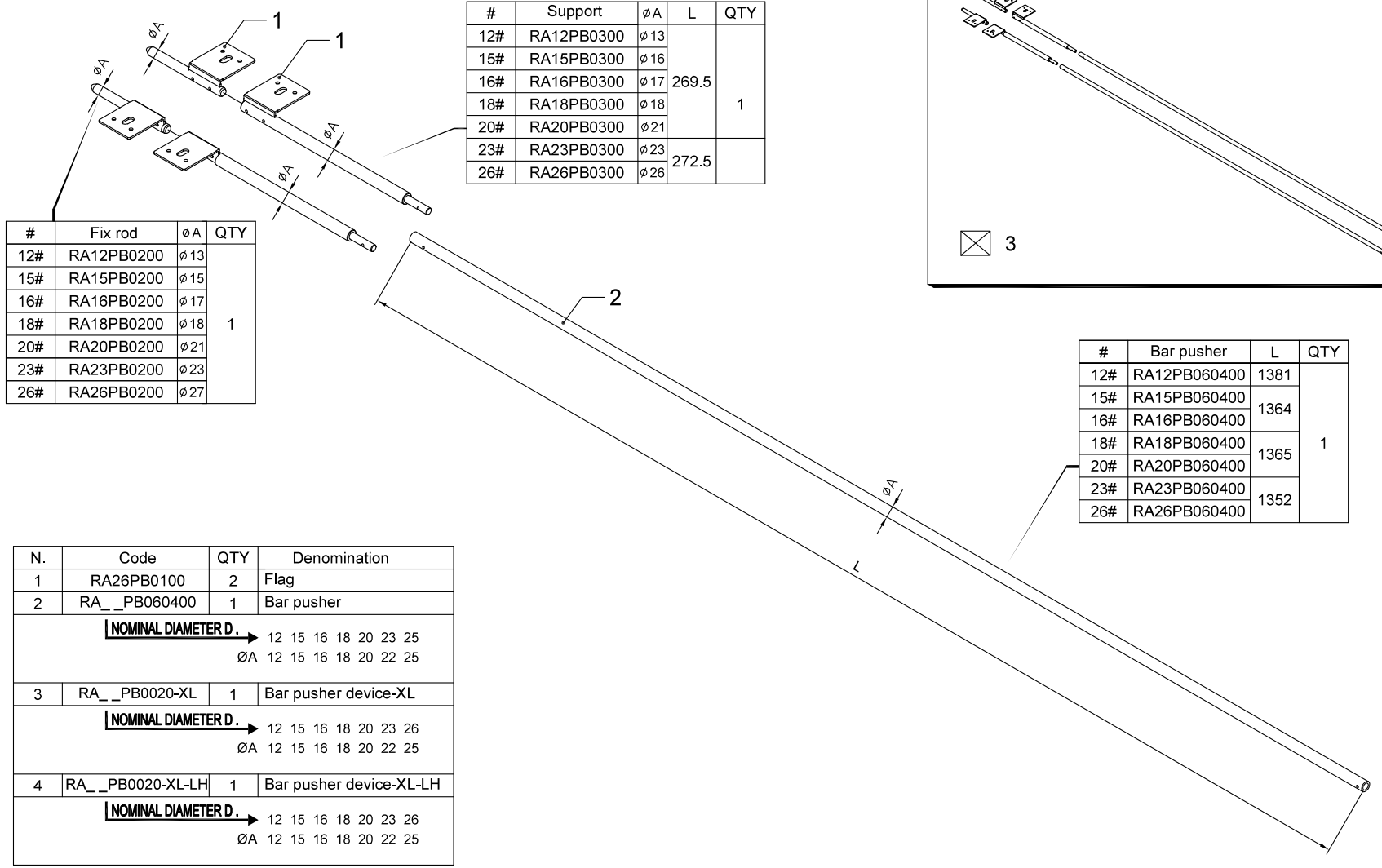

#	Support	ØA	L	QTY
12#	RA12PB0300	Ø13	269.5	1
15#	RA15PB0300	Ø16		
16#	RA16PB0300	Ø17		
18#	RA18PB0300	Ø18		
20#	RA20PB0300	Ø21		
23#	RA23PB0300	Ø23	272.5	
26#	RA26PB0300	Ø26		

#	Fix rod	ØA	QTY
12#	RA12PB0200	Ø13	1
15#	RA15PB0200	Ø15	
16#	RA16PB0200	Ø17	
18#	RA18PB0200	Ø18	
20#	RA20PB0200	Ø21	
23#	RA23PB0200	Ø23	
26#	RA26PB0200	Ø27	

#	Bar pusher	L	QTY
12#	RA12PB060400	1381	1
15#	RA15PB060400	1364	
16#	RA16PB060400		
18#	RA18PB060400	1365	
20#	RA20PB060400		
23#	RA23PB060400	1352	
26#	RA26PB060400		

N.	Code	QTY	Denomination
1	RA26PB0100	2	Flag
2	RA_ _PB060400	1	Bar pusher
	NOMINAL DIAMETER D. →		12 15 16 18 20 23 25
		ØA	12 15 16 18 20 22 25
3	RA_ _PB0020-XL	1	Bar pusher device-XL
	NOMINAL DIAMETER D. →		12 15 16 18 20 23 26
		ØA	12 15 16 18 20 22 25
4	RA_ _PB0020-XL-LH	1	Bar pusher device-XL-LH
	NOMINAL DIAMETER D. →		12 15 16 18 20 23 26
		ØA	12 15 16 18 20 22 25

SCOUT 320

BAR PUSHER DEVICE XL

Tab. 072 5

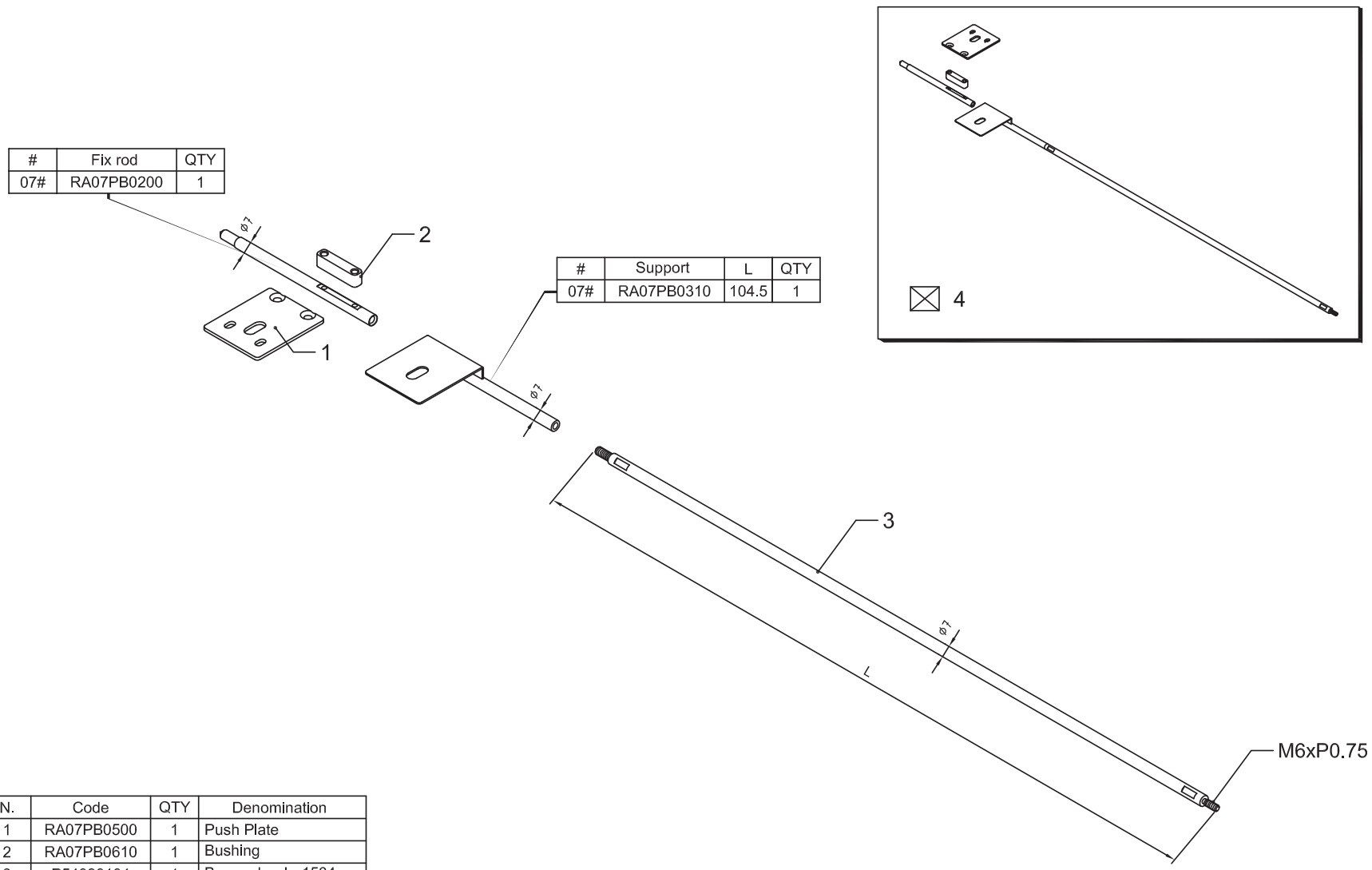

#	Fix rod	QTY
07#	RA07PB0200	1

#	Support	L	QTY
07#	RA07PB0310	104.5	1

N.	Code	QTY	Denomination
1	RA07PB0500	1	Push Plate
2	RA07PB0610	1	Bushing
3	P54080104	1	Bar pusher L=1534
4	RA07PB0020-XL	1	Bar pusher device-XL

SCOUT 320

#7 TYPE BAR PUSHER DEVICE XL

Tab. 073 4

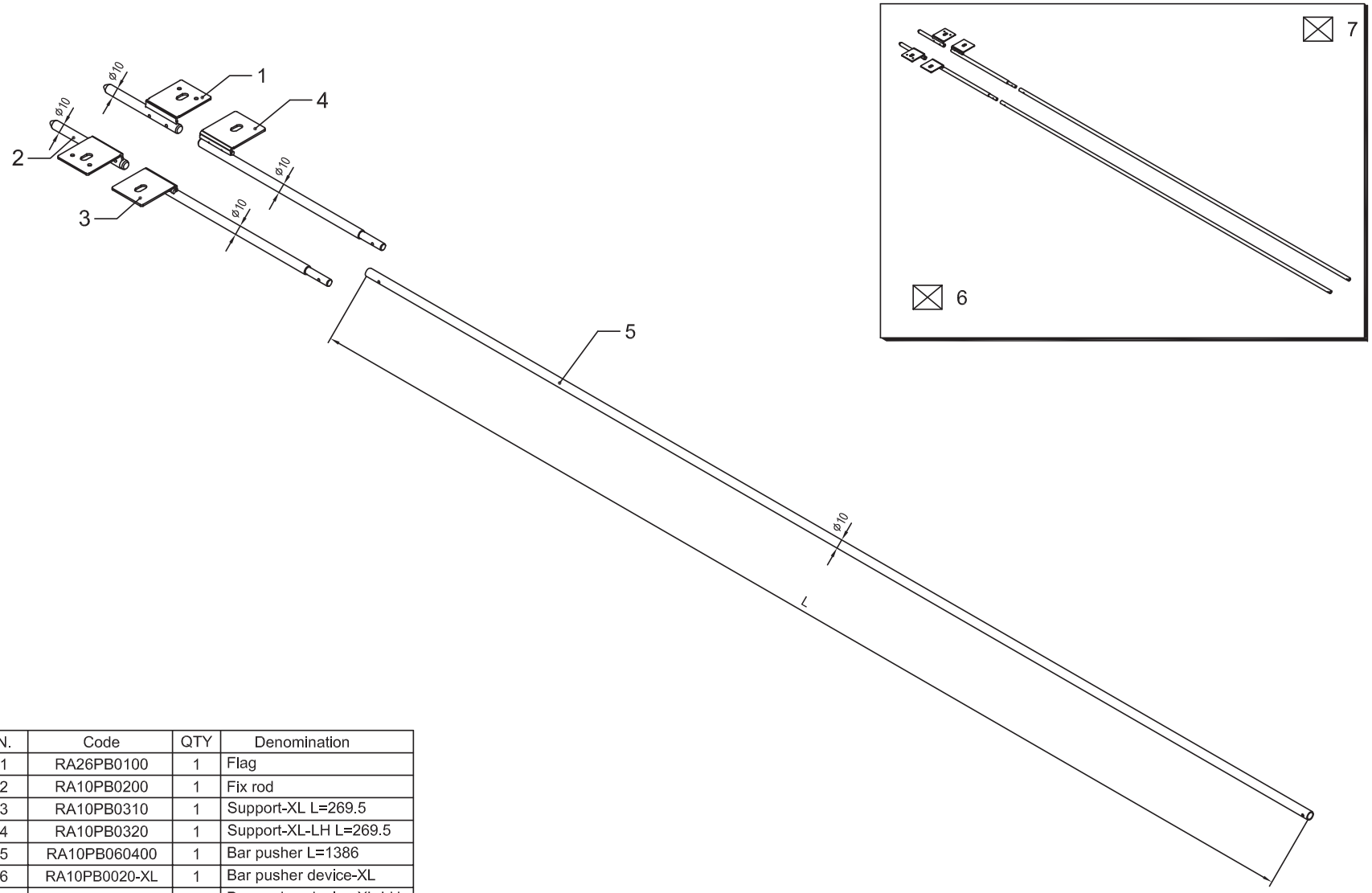

N.	Code	QTY	Denomination
1	RA26PB0100	1	Flag
2	RA10PB0200	1	Fix rod
3	RA10PB0310	1	Support-XL L=269.5
4	RA10PB0320	1	Support-XL-LH L=269.5
5	RA10PB060400	1	Bar pusher L=1386
6	RA10PB0020-XL	1	Bar pusher device-XL
7	RA10PB0020-XL-LH	1	Bar pusher device-XL-LH

SCOUT 320

#10 TYPE BAR PUSHER DEVICE XL

Tab. 074 3

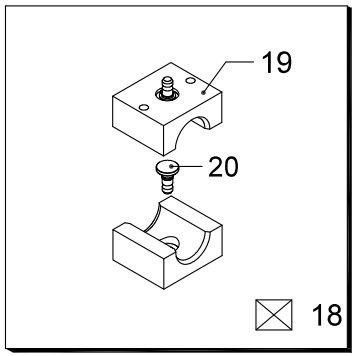

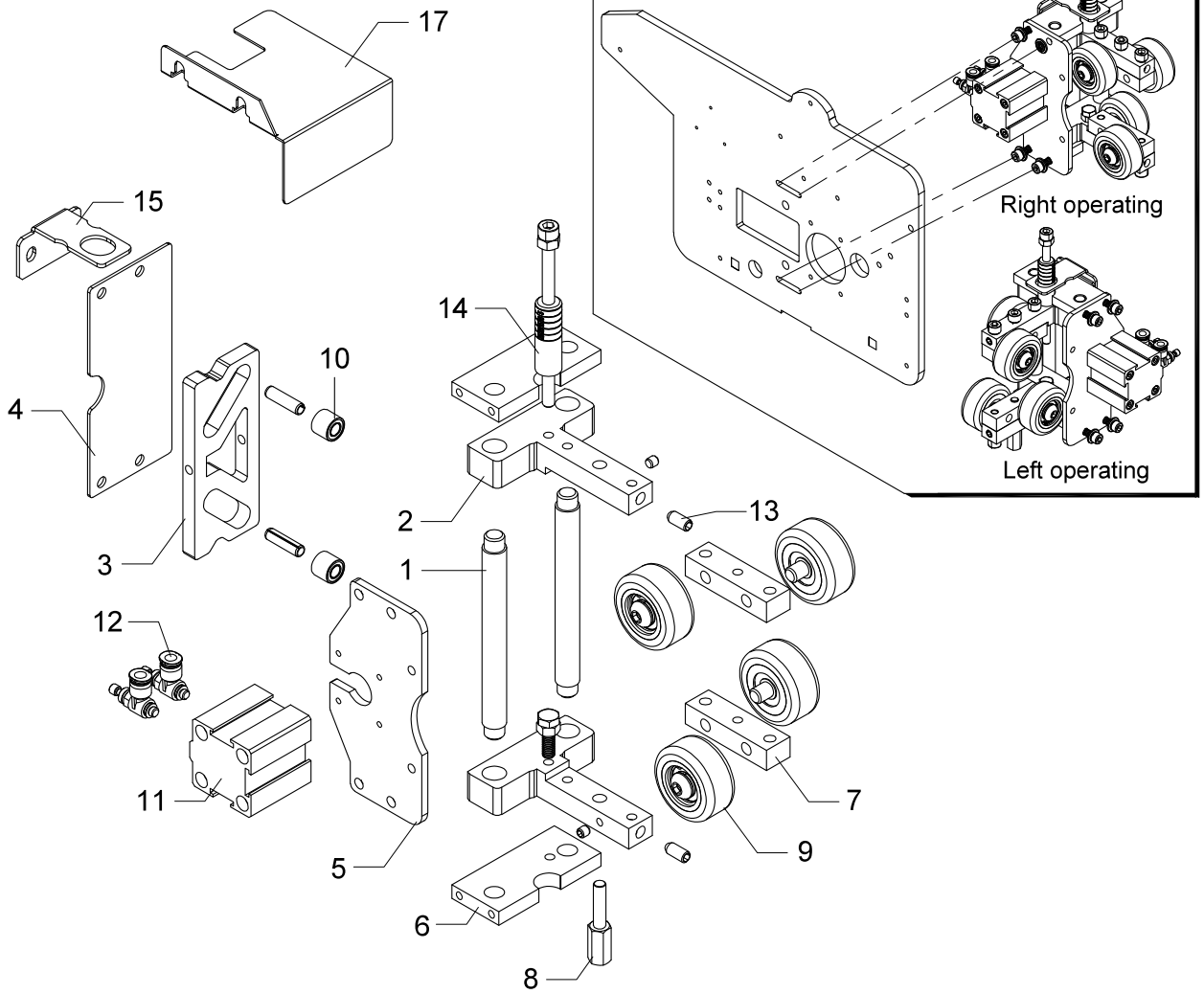

N.	Code	QTY	Denomination
1	P85200100	2	Arbor
2	P85200200	2	Anchor
3	P85200300	1	Plate
4	P85200500	1	Plate
5	P85200600	1	Plate
6	P85200700	2	Plate
7	P85200900	2	Anchor
8	P85201300	1	Arbor
9	HP8127000F	4	Spacer set
10	P85202300	2	Roller
11	A11130100	1	Cylinder SDA25x20
12	A12130300	2	Flow regulator M5,ø6
13	G55120900	2	Ball BP-06L
14	P85201350	1	Scale shaft
15	P85201360	1	Indicator plate
16	RA26BU000A	1	First anti-vibration device (Right operating)
	RA26BU001A	1	First anti-vibration device (Left operating)
17	RA26BU0100	1	Cover (Right operating)
	RA26BU0110	1	Cover (Left operating)
18	P852010_ _A	1	**Anti-vibration bushing set**
19	P852010_ _	2	Bushing block
NOMINAL DIAMETER D. →	02 08 10 12 14 16 18 20 22 24 26 28		
Ø	03 09 11 13 15 17 19 21 23 25 27 29		
20	P85200800	2	Arbor

SCOUT 320

FIRST ANIT-VIBRATION DEVICE

Tab. 080 3

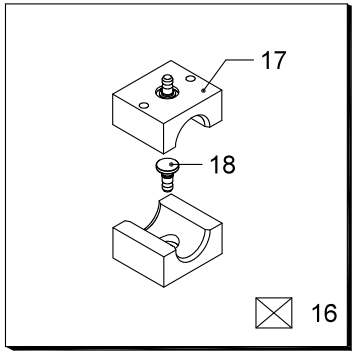

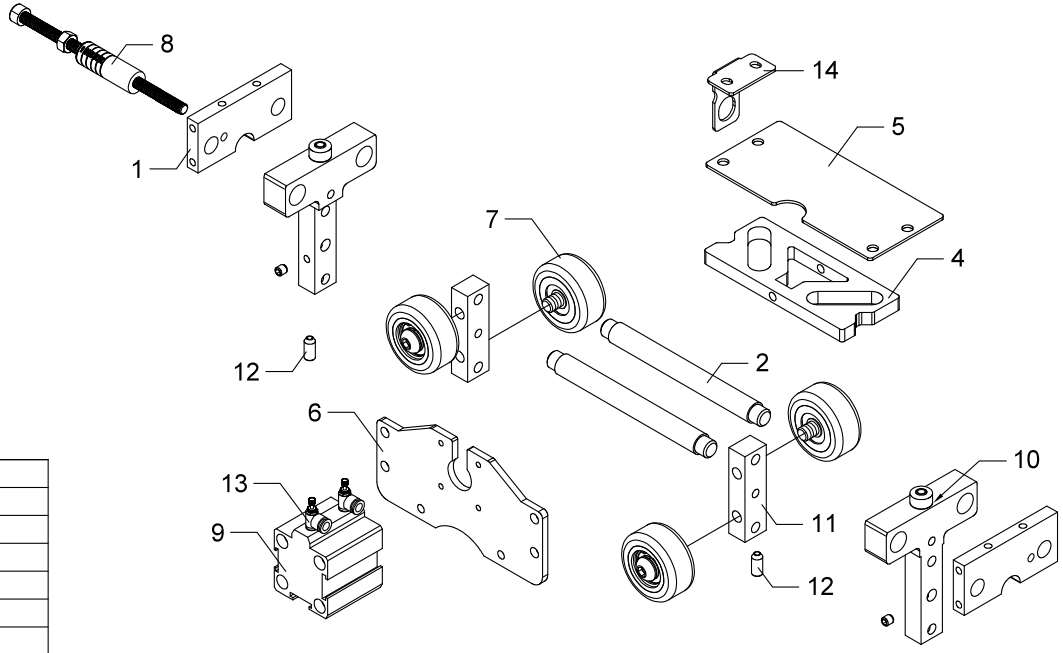

N.	Code	QTY	Denomination
1	P85200700	2	Plate
2	P85200100	2	Arbor
3	P85200200	2	Anchor
4	P85200300	1	Plate
5	P85200500	1	Plate
6	P85200600	1	Plate
7	HP8127000F	4	Spacer set
8	P85201350	1	Scale shaft
9	A11130100	1	Cylinder SDA 25x20
10	P85202300	2	Roller
11	P85200900	2	Anchor
12	G55120900	2	Ball BP-06L
13	A12130300	2	Flow regulator M5,Ø6
14	P85201360	1	Indicator plate
15	HP8127002A	1	Anti-vibration device (Right operating)
	HP8127001A	1	Anti-vibration device (Left operating)
16	P852010_ _A	1	Bushing set
17	P852010_ _	2	Bushing block
NOMINAL DIAMETER D. →	02 08 10 12 14 16 18 20 22 24 26 28		
Ø	03 09 11 13 15 17 19 21 23 25 27 29		
18	P85200800	2	Arbor

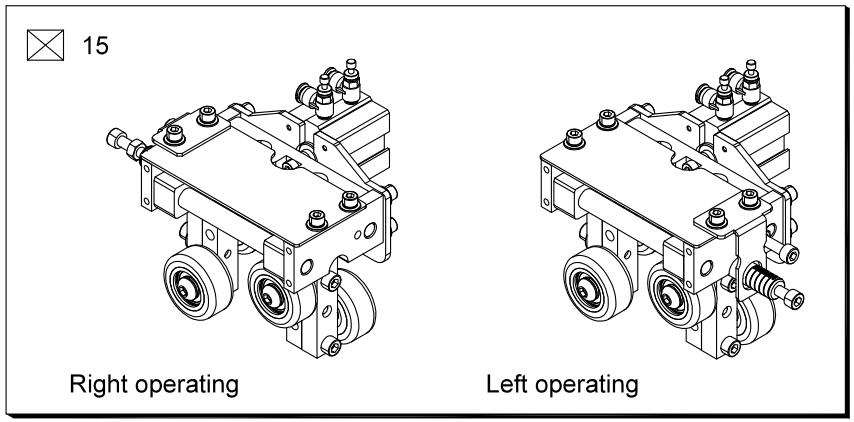

SCOUT 320

MOVEABLE ANTI-VIBRATION DEVICE

Tab. 081 4

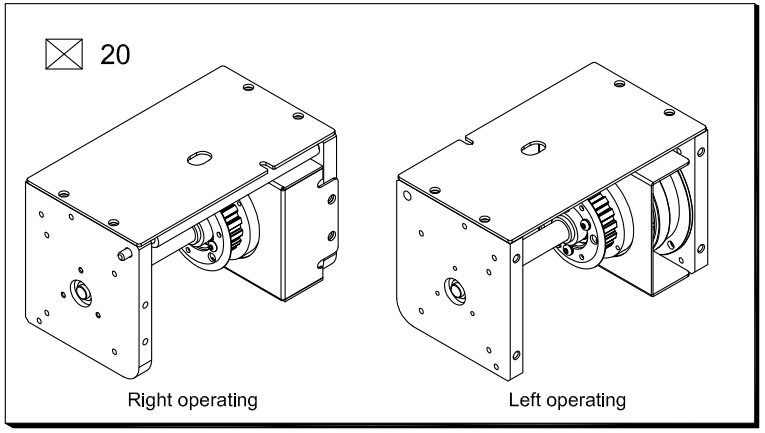

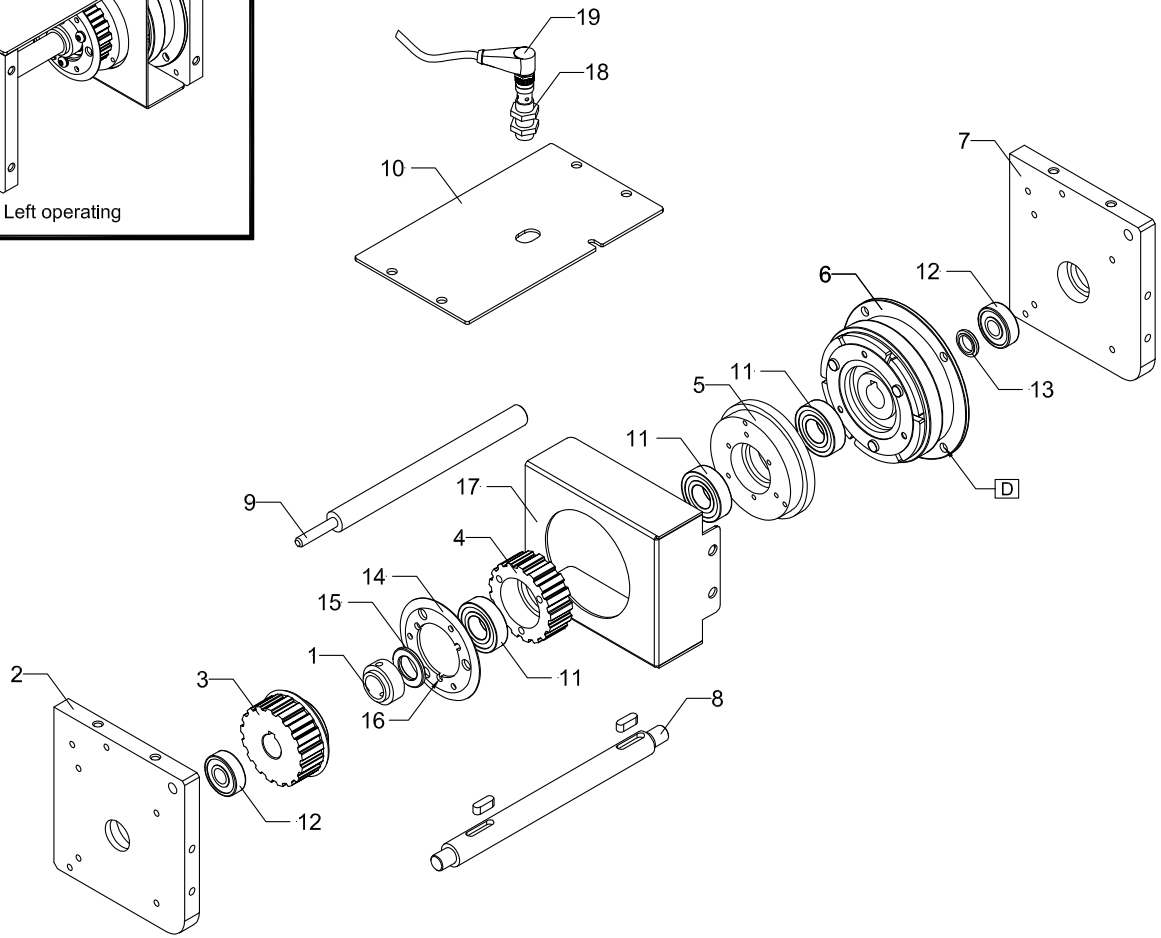

N.	Code	QTY	Denomination
1	RA26DR1200	1	Fixing ring
2	RA26DR5100	1	Plate (L)
3	P49201700	1	Pulley
4	P49203100	1	Pulley L 17T
5	RA26DR1010	1	Bearing seat
6	RA26DR2000	1	Clutch
7	RA26DR5200	1	Plate (R)
8	RA26DR5300	1	Shaft
9	RA26DR5500	1	Connector rod
10	RA26DR5000	1	Plate
11	B6002ZZ	3	Bearing 6002ZZ
12	B6000ZZ	2	Bearing 6000ZZ
13	RA26DR1910	1	Bushing T=2.6mm
14	607460402	1	Plate
15	RA26MA2600	1	Bushing
16	ZS160425C	3	Hexangular screw
17	RA26DR5600-6	1	Shroud
18	J312500	1	Sensor switch
19	J312501	1	Sensor switch line
20	RA26DR001B	1	Sychronization(Rightoperating)
	RA26DR002B	1	Sychronization (Left operating)

SCOUT 320

SYCHRONIZATION DEVICE (BELT)

Tab. 090 4

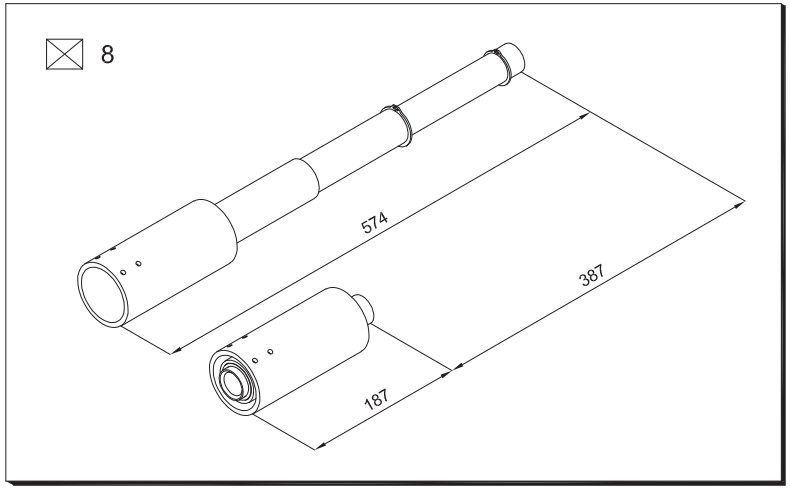

N.	Code	QTY	Denomination
1	MEP20061	1	360MM TELE NOSE 1ST STAGE TUBE
2	MEP20053	1	360MM TELE NOSE 2ND STAGE TUBE
3	MEP20055	1	360MM TELE NOSE 3RD STAGE TUBE
4	ZS07S035	1	C RING-S35 (SHAFT)
5	ZS07S027	1	C RING-S27 (SHAFT)
6	MEP2005817	1	360MM TELE NOSE 4TH STAGE TUBE
7	P78161500	1	BUSHING
8	PTEL32021__	1	360MM TELE NOSE-MINUTEMAN-TSUGAMI SS20

NOMINAL DIAMETER D. → 8 11 14

360MM TELE NOSE 4TH STAGE-11MM ID INSERT			
#	Code	Ø A	Ø B
11#	MEP2006216	11	15

Code	Ø A
MEP20063	15

360MM TELE NOSE 4TH STAGE-14 or 8MM ID INSERT			
#	Code	Ø A	Ø B
8#	MEP2006016	8	18
14#	MEP2005916	14	18

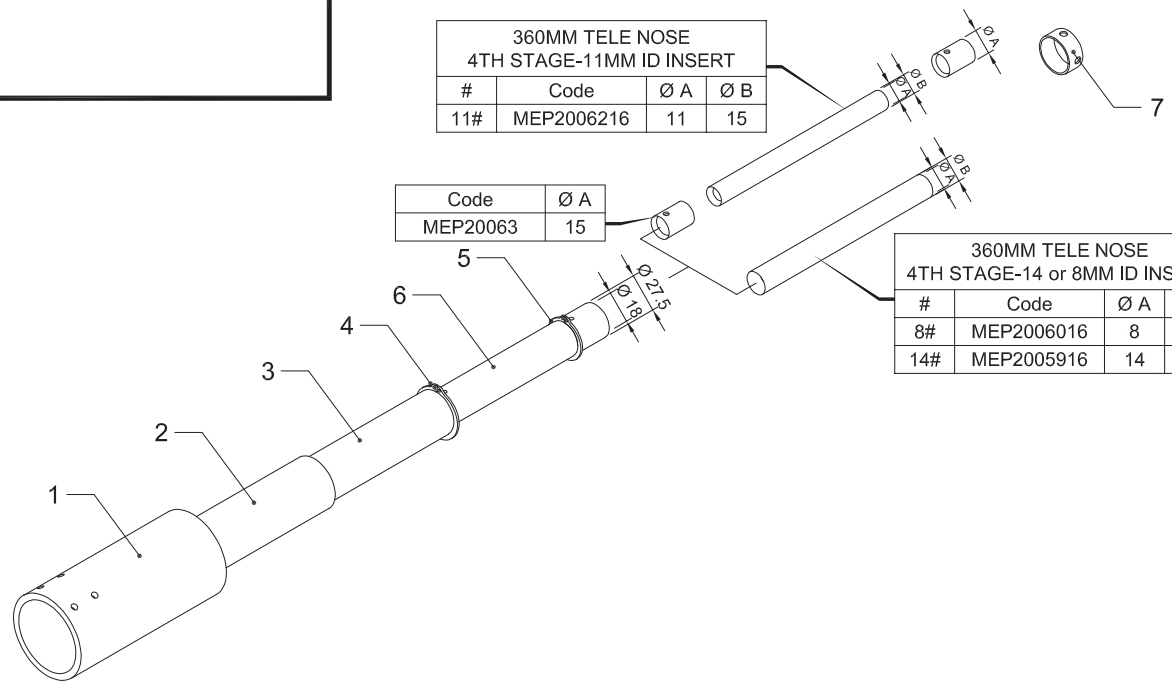

08
11
14

SCOUT 320

400MM TELE NOSE L=574mm

Tab. PTEL32021__ 1

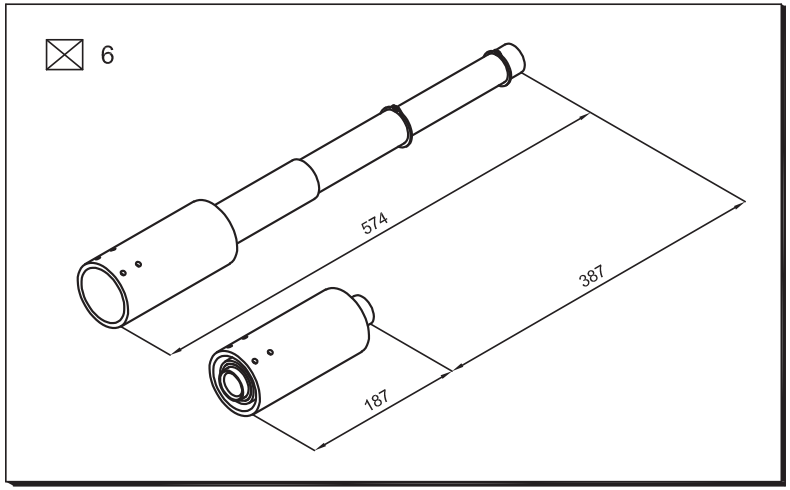

N.	Code	QTY	Denomination
1	MEP20061	1	360MM TELE NOSE 1ST STAGE TUBE
2	MEP20053	1	360MM TELE NOSE 2ND STAGE TUBE
3	MEP20054	1	360MM TELE NOSE 3RD STAGE TUBE
4	ZS07S035	1	C RING-S35 (SHAFT)
5	ZS07S030	1	C RING-S30 (SHAFT)
6	PTEL32021__	1	360MM TELE NOSE-MINUTEMAN-TSUGAMI SS20

NOMINAL DIAMETER D. → 18 20 22 24 28

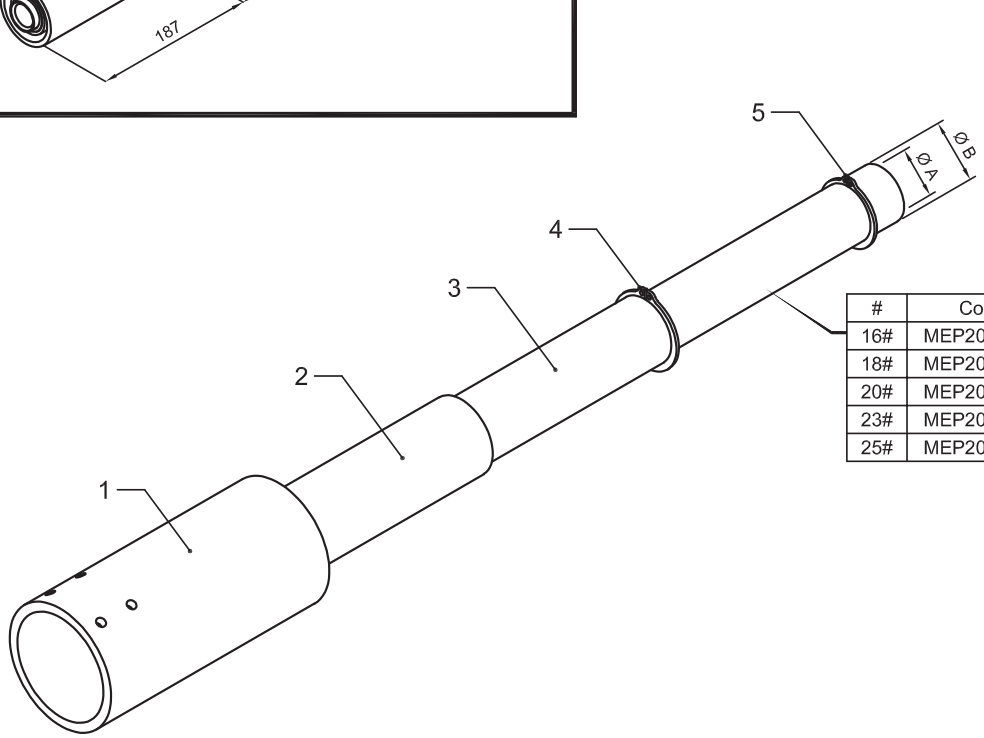

#	Code	Ø A	Ø B
16#	MEP2005617	24	30
18#	MEP2005617	24	30
20#	MEP2005617	24	30
23#	MEP2005617	24	30
25#	MEP2006619	27	30

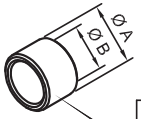

#	Code	Ø A	Ø B
16#	P82161600	30	18
18#	P82181600	30	20
20#	P82201600	30	22

18
20
22
24
28

SCOUT 320

400MM TELE NOSE L=574mm

Tab. PTEL32021_ _ 1

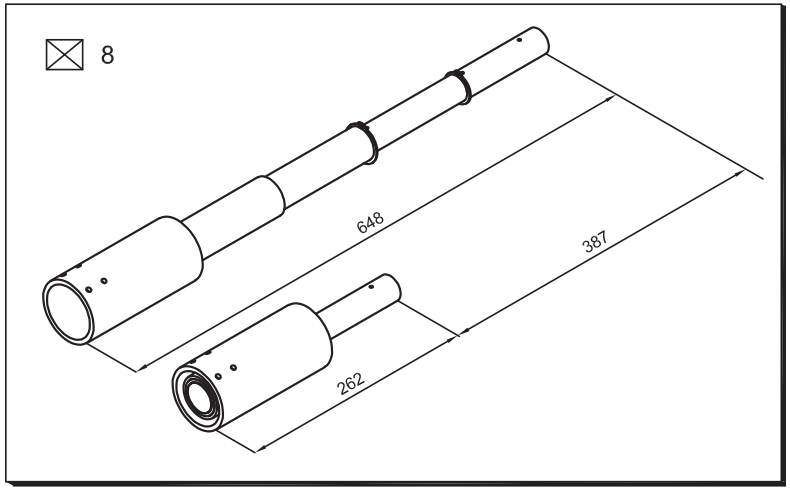

N.	Code	QTY	Denomination
1	MEP20061	1	360MM TELE NOSE 1ST STAGE TUBE
2	MEP20053	1	360MM TELE NOSE 2ND STAGE TUBE
3	MEP20055	1	360MM TELE NOSE 3RD STAGE TUBE
4	ZS07S035	1	C RING-S35 (SHAFT)
5	ZS07S027	1	C RING-S27 (SHAFT)
6	MEP20058	1	360MM TELE NOSE 4TH STAGE TUBE
7	P78161500	1	BUSHING
8	PTEL32022__	1	360MM TELE NOSE-MINUTEMAN-TSUGAMI SS20

NOMINAL DIAMETER D. → 8 11 14

360MM TELE NOSE
4TH STAGE-11MM ID INSERT

#	Code	Ø A	Ø B
11#	MEP20062	11	15

Code	Ø A
MEP20063	15

360MM TELE NOSE
4TH STAGE-14 or 8MM ID INSERT

#	Code	Ø A	Ø B
8#	MEP20060	8	18
14#	MEP20059	14	18

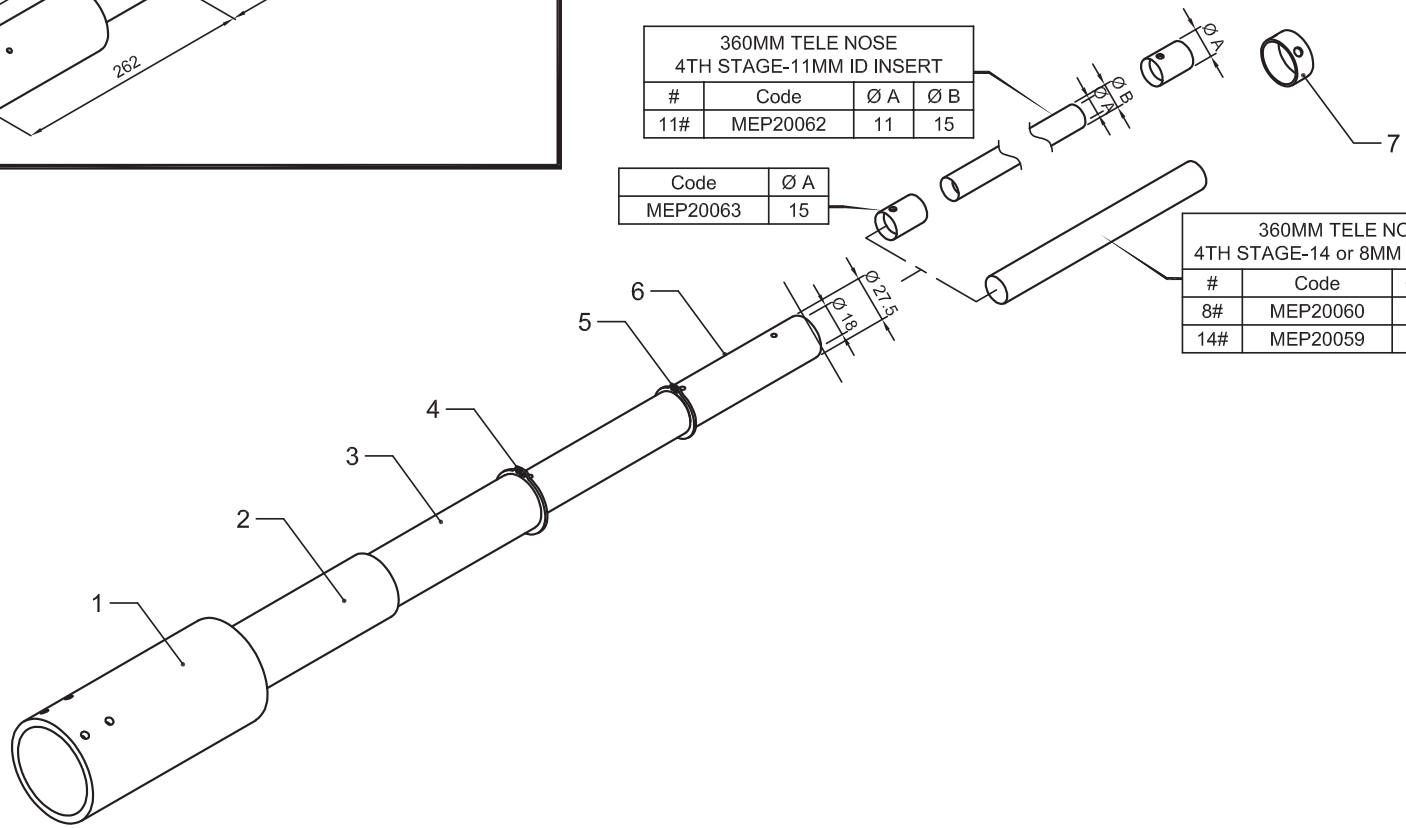

08
11
14

SCOUT 320

400MM TELE NOSE L=648mm

Tab. PTEL32022_ _ 1

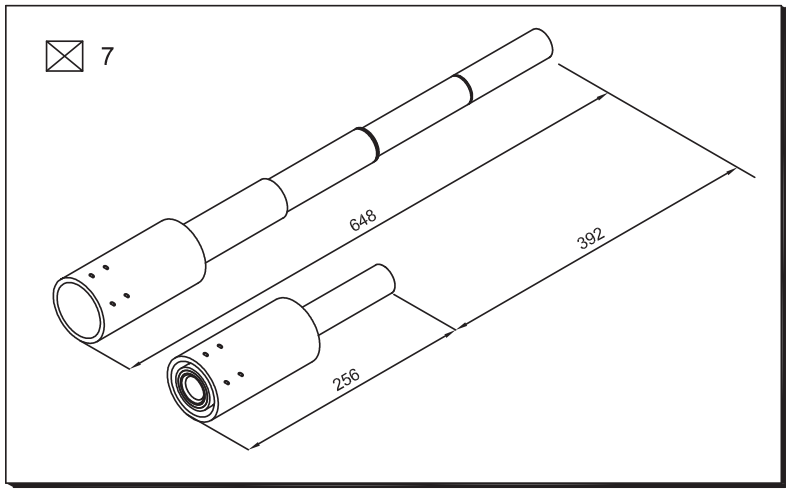

N.	Code	QTY	Denomination
1	MEP20061	1	360MM TELE NOSE 1ST STAGE TUBE
2	MEP20053	1	360MM TELE NOSE 2ND STAGE TUBE
3	MEP20054	1	360MM TELE NOSE 3RD STAGE TUBE
4	ZS07S035	1	C RING-S35 (SHAFT)
5	ZS07S030	1	C RING-S30 (SHAFT)
6	P82201500	1	RING
7	PTEL32022__	1	360MM TELE NOSE-MINUTEMAN-TSUGAMI SS20

NOMINAL DIAMETER D. → 18 20 22 24 28

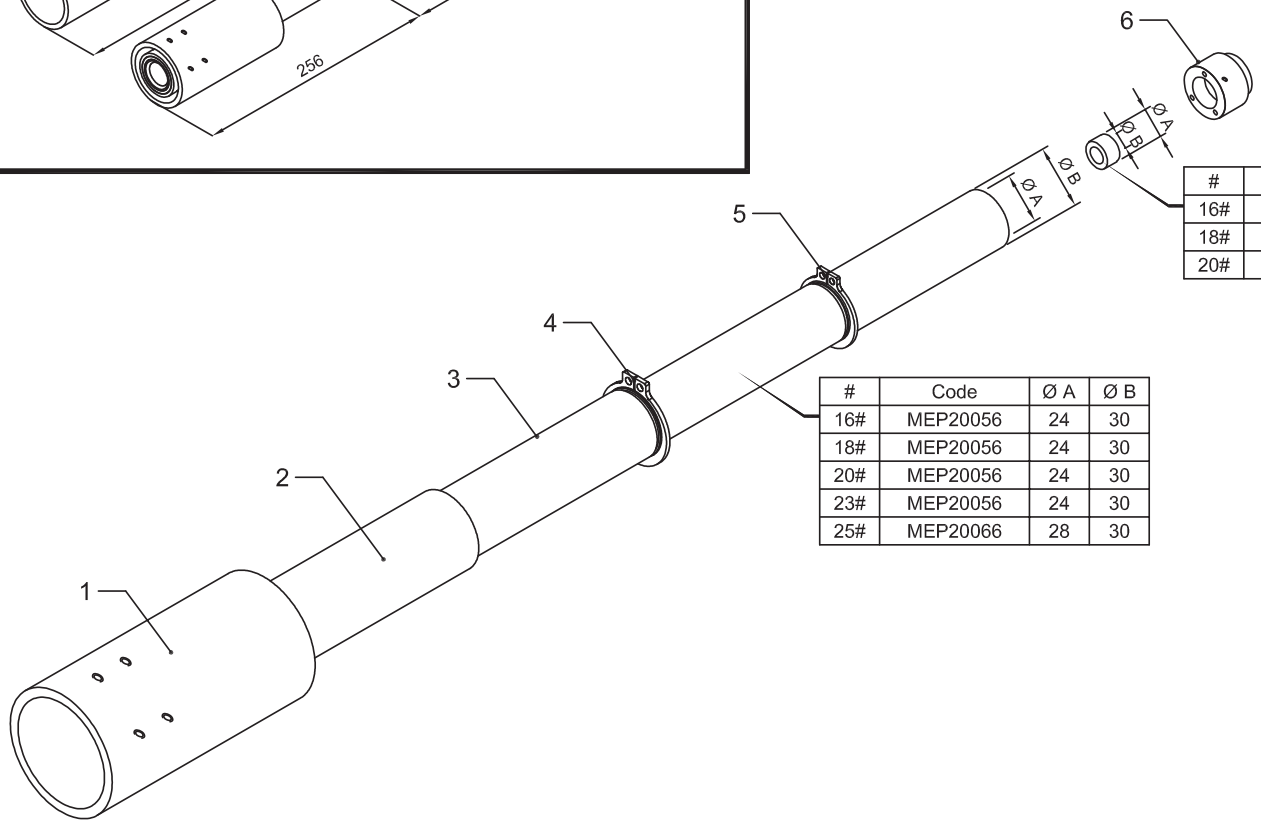

#	Code	Ø A	Ø B
16#	P82161600	30	18
18#	P82181600	30	20
20#	P82201600	30	22

#	Code	Ø A	Ø B
16#	MEP20056	24	30
18#	MEP20056	24	30
20#	MEP20056	24	30
23#	MEP20056	24	30
25#	MEP20066	28	30

18
20
22
24
28

SCOUT 320

400MM TELE NOSE L=648mm

Tab. PTEL32022__ 2